Schindler 3100/3300/3600/5300/6200/6300 with control Bionic

IMS - Commissioning

K 43404439_00

Copyright © 2015 INVENTIO AG

Schindler

About this document

This document describes the learning travel and commissioning of Schindler 3100, Schindler 3300, Schindler 3600, Schindler 5300 Schindler 6200 Rel. 04 and Schindler 6300 with the control Bionic 5 (CO BIC 5) and Bionic 6 (CO BIC 6) based and support the scaffoldless installation method.

Version notes

Version	KA data	Reason
00	– KA No.: 340409 – KA date: 2015-06-06	New document type.

This is the released English version.

Document_Version	KA No.	KA Date	Classification	Prepared
K 43404439_00	340409	2015-06-06	11010	ebertju
Reviewed	**Norms Checked**	**Released**	**Lead Office**	**Language**
lacartjo	ebertju	haerriku	GF0	EN

Copyright © 2015 INVENTIO AG All rights reserved. INVENTIO AG, Seestrasse 55, CH-6052 Hergiswil, owns and retains all copyrights and other intellectual property rights in this manual. It shall only be used by SCHINDLER personnel or authorized SCHINDLER agents for purposes which are in the interest of SCHINDLER. Any reproduction, translation, copying or storing in data processing units in any form or by any means without prior permission of INVENTIO AG is regarded as infringement and will be prosecuted.

Table of contents

1 Safety requirements 6
1.1 Personal protective equipment 6
1.2 Risks and risk mitigation 6

2 Controller versions of CO BIC 7

3 Main tasks for commissioning 8

4 Checking for residual current device and type 9

5 Preparing of CO BIC 5 (LDU or MR) 11
5.1 LDU controller cabinet 11
5.2 MR controller cabinet 13
5.3 Supply module 14
5.4 SEM 15
5.5 SMIC 16
5.6 Frequency converter 18
5.6.1 Frequency converter outside of LDU for CO BIC 5 18
5.6.2 Biodyn 9/12 C BR 19
5.6.3 Biodyn 25/42 C BR 21
5.6.4 Biodyn 21 C BR CN 22
5.6.5 Biodyn 36 C BR CN 23

6 Preparing of CO BIC 6 (LDU) 24
6.1 CO BIC 6 with LDU 24
6.2 Module CO BIC 6 25
6.3 Main power supply 28
6.4 Drive module DR VCI10 29

7 Preparing of optional TSD21 31

8 Performing of installation travel 32
8.1 Switching on of power supply first time 32
8.2 Checking of direction of motor and encoder 34
8.3 Installation travel with ESE recall panel 35
8.4 Installation travel with ESE recall panel on car roof 39
8.5 Installation travel with REC inspection panel 41

9 Tasks before learning travel 43
9.1 Checking of components 43
9.1.1 Controller cabinet for learning travel (LDU and MR) 43
9.1.2 Car roof and hoistway information for learning travel 46
9.1.3 Car operating panel 51
9.2 Checking of REC inspection control station 52
9.3 Commissioning of car door drive 53
9.3.1 Fermator 54
9.3.2 Sematic 55
9.3.3 V15 57
9.4 Configuring of STM 60

9.4.1 Reconfiguring of STM 61
9.5 Checks before learning travel 61

10 Performing of learning travel 63

11 Mandatory configurations after learning travel 65
11.1 Load measuring 66
11.1.1 Reconfiguring of load measuring 69
11.2 Car operation panel FIGS or COP5 70
11.3 Floor designations 71
11.4 LOP 72
11.5 Manual counting of LOP 74
11.6 Long interfloor distance LIFD 75
11.7 Selective doors (ZZ2, ZZ3) 76
11.8 Car dumping device 84

12 Configuring of LOP functions 85
12.1 FIGS — LOP, LIP, LCUX 85
12.2 FIGL — LOP, LIN, LCUX 87
12.3 Fire service switch JBF (BR) 89
12.4 Floor call key switch JDE and JAB 90
12.5 LOP landing functions JNFF, JBF, JAB 91
12.6 Additional inputs and outputs LCUX 92

13 Configuring of COP functions 96
13.1 PIN code protected car call ZB1 96
13.2 Car call key switch JDC and floor access restrictions ZB3 96
13.3 Reservation key switch JRVC in car 97
13.4 Visitor control GS 98
13.4.1 Visitor control GS description 98
13.4.2 Configuring of visitor control GS 99
13.5 Parallel card reader interface CRC (ZBC2) up to 21 floors 100
13.6 Parallel card reader interface CRC (ZBC2) up to 35 floors 102

14 Configuring of group control 105
14.1 Duplex general information 105
14.2 Duplex with LOPs-FIGS and single riser 106
14.3 Duplex with LOPs-FIGL and single riser 108
14.4 Asymmetric duplex 109
14.5 Triplex with overlay box 112

15 Other components 114
15.1 Embedded telemonitoring and alarm ETMA 114
15.2 Retainer Plus and ECM Plus 116

16 BMK function codes 117

17 HMI user interface 125
17.1 Main menu 127
17.2 Configuration menu structure 128
17.3 Menu elements 129

 Copyright © 2015 INVENTIO AG

17.4 Adjusting of parameter values 129

18 Diagnostics 130
18.1 Elevator status 130
18.2 Accessing of error log 135
18.3 Error log description 136
18.4 Recovering of system errors 137
18.4.1 Elevator control after fatal error 137
18.4.2 Elevator control after fatal error from car roof 138
18.4.3 Elevator control after persistent fatal error 139
18.4.4 GBP 140
18.4.5 TSD21 system — short head / short pit 141
18.5 Indicated errors during LOP configuration 142

A A: Terms used 143

1 Safety requirements

1.1 Personal protective equipment

The following standard personal protective equipment (PPE) must be used when performing any installation or maintenance work.

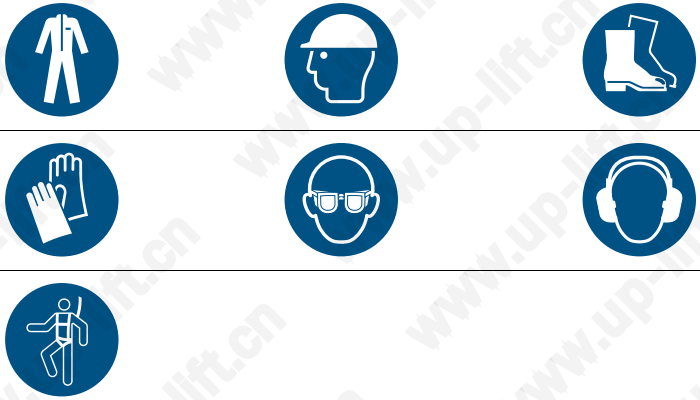

1.2 Risks and risk mitigation

See K 43402271 Risk analysis report for used symbols.

 Copyright © 2015 INVENTIO AG

2 Controller versions of CO BIC

The identification of the version of the controller CO BIC of each commissioning order is relevant for the steps of the commissioning.

Controller version	Location of controller cabinet	Location of frequency converter	Car PCBA	COP PCBA
CO BIC 5.7	LDU or Machine room.	Wall or Machine support.	SDIC	CANCP or SCOP.
CO BIC 5.9	LDU or Machine room.	Wall or Machine support.	SCMI2x	SCCI
CO BIC 6.1	LDU	LDU	SDIC	CANCP or SCOP

– CO BIC 5.7 = without integration of CCU in COP.
  The PCBA in CCU/OKR = SDIC.
– CO BIC 5.9 = with integration of CCU in COP.
  The PCBA in CCU/OKR = SCMI2x.
– CO BIC 6.1 = the LDU includes the controller module and the frequency converter.

3 Main tasks for commissioning

Main tasks for the commissioning

- Mains power supply (power and lighting)
- Controller cabinet (control Bionic 5 or control Bionic 6)
- If control Bionic 5: Frequency converter
- First power on
- Function check of machine
- Installation travel (with recall control panel ESE and inspection control panel REC)
- Car door drive commissioning
- Set up of traction media monitoring
- Learning travel
- Mandatory configuration
- Optional system configuration

 Copyright © 2015 INVENTIO AG

4 Checking for residual current device and type

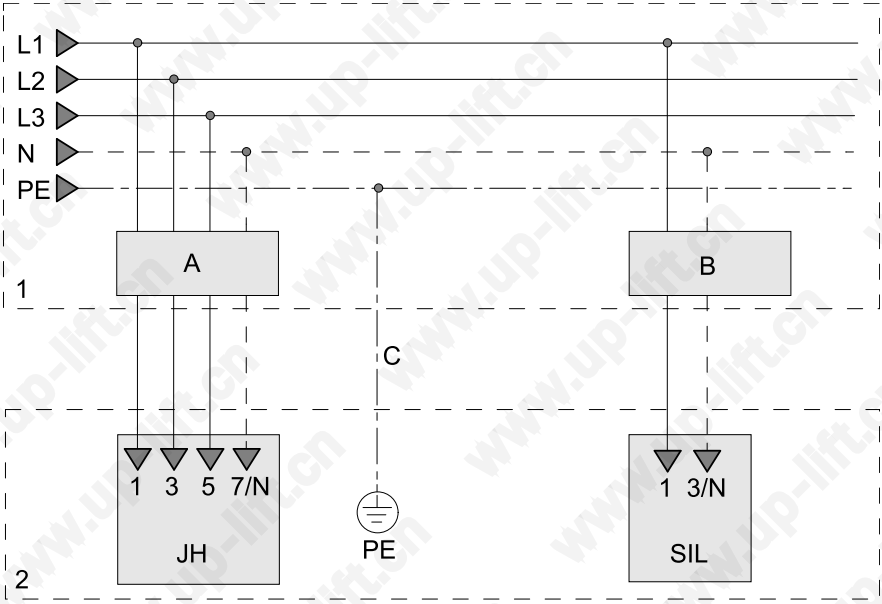

[0000029790]

1 Building

2 Elevator

A Protection for the power supply

B Protection for the light supply

C Protective earth wiring

⚠ DANGER

Hazardous voltage

Contact with live parts will result in electric shock.

Switch off the main switch and de-energize the installation completely before starting to work on the installation.

⚠ DANGER

Hazardous capacitive energy

Contact with live parts of a power circuit with charged capacitors will result in electric shock.

- Wait at least 10 minutes after switching off the power for a full discharge of the capacitors.
- Keep the capacitive circuit grounded while working on the installation.

▶ LDU / Machine room: For your safety, switch off and lockout the main switches.

▶ To fully discharge the capacitive circuits after switching off the power supply, wait more than 10 minutes.

▶ If residual current protection RCD or residual-current monitoring RCM is installed on the power supply side of the inverter, check:
- RCD = type B
- RCM = type B.

▶ Check the network type on the building:
- TN or
- TT.

▶ For correct electrical protections according to elevator and network characteristics, refer to the schematics.

▶ If TN network and RCD / RCM in the power supply from the building: Check RCD / RCM = type B.

In the TN protective earthing system, the consumer is not connected to protective earth directly.

▶ If TT network, check:
- RCD / RCM = installed
- RCD / RCM = type B.

In the TT protective earthing system, one point of the consumer is connected to protective earth directly.

 Copyright © 2015 INVENTIO AG

5 Preparing of CO BIC 5 (LDU or MR)

5.1 Preparing of LDU controller cabinet

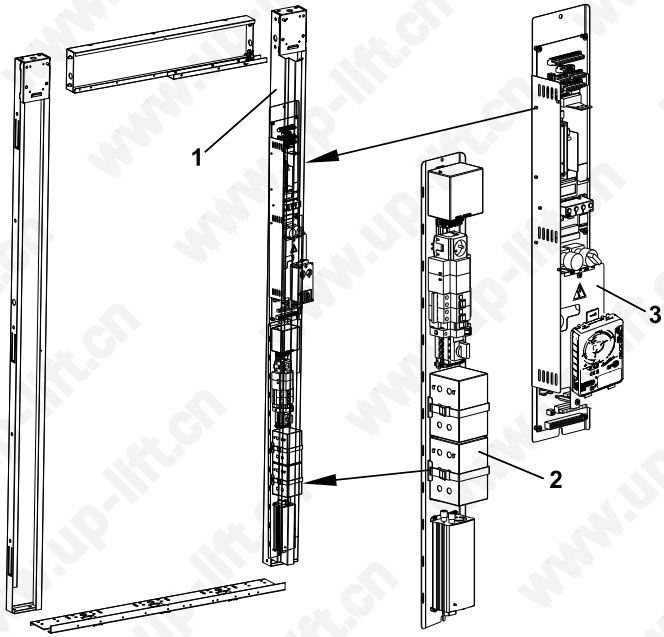

[0000029791]

1 LDU

2 Supply module

3 Base module

► Check that the supply module is installed into the closing door jamb.
► Check that the base module is installed into the closing door jamb.

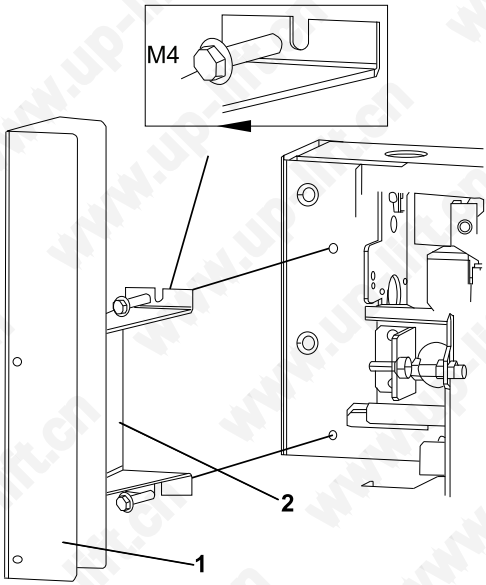

[0000029792]

1 Hoistway information flag

2 Hoistway information flag support

► LDU door: Before perform the main LDU wiring, check that the hoistway information flag is installed.

► To install the fire protective intumescent strip, check the free space at the cables above the hoistway information flag.

► To avoid collisions with the elevator, check the routing of the cables along the hoistway.

 Copyright © 2015 INVENTIO AG

5.2 Preparing of MR controller cabinet

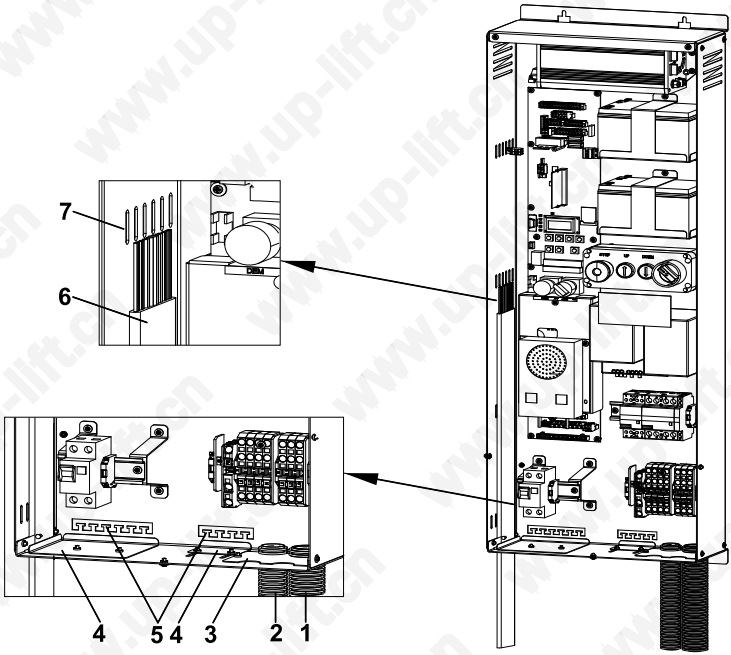

[0000029793]

1	ACVF cable conduit	**5**	Fixpoint
2	Main switch cables conduit	**6**	Traveling cable
3	IP protection plate for conduit	**7**	Slot
4	IP protection plate for traveling cable		

- ► To have an easier access to the wiring, remove the installation cover.
- ► SMIC: Plug in all wires through the controller cabinet into the slotted lateral plate.

5.3 Preparing of supply module

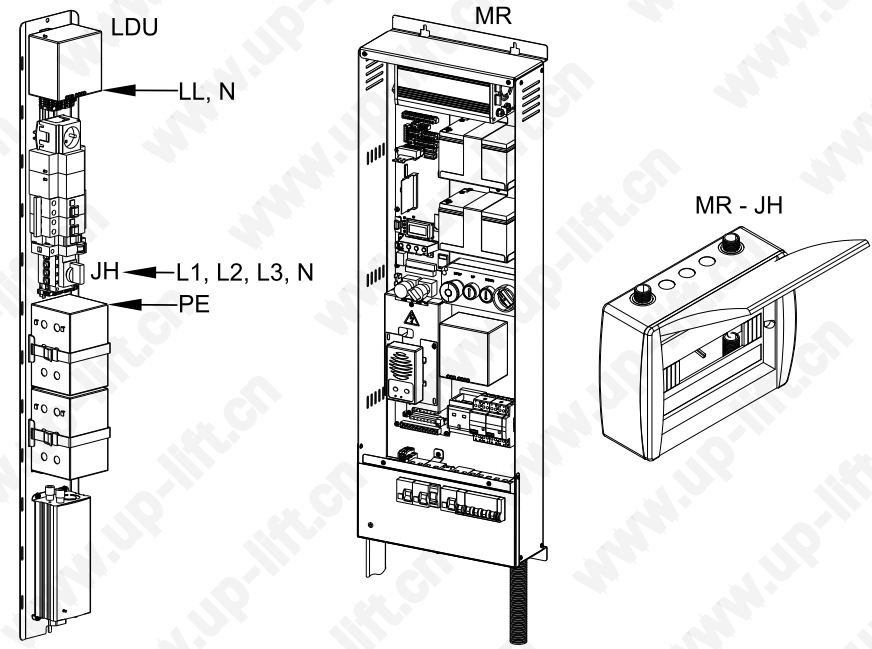

[0000029794]

- ► Switch = off:
  - – JH.
  - – SIL.
  - – SIBS.
  - – JLBS.
  - – SIS.
- ► Controller cabinet / main switch box:
  - – Connect the mains power supply (L1, L2, L3, N) → the main switch JH.
  - – Connect the mains lighting supply (LL, N) → the main switch SIL
  - – Connect the power supply (L1, L2, L3, N) from JH → the terminal X1.
  - – Connect the protective earth PE → the terminal X1.
- ► Controller cabinet: Check that the lighting supply, connector POWL is available.

  Cable from lighting supply (LL, N) → connector POWL.
- ► If evacuation system in the controller cabinet: Do not connect the battery to the inverter DC-AC.

 Copyright © 2015 INVENTIO AG

5.4 Preparing of SEM

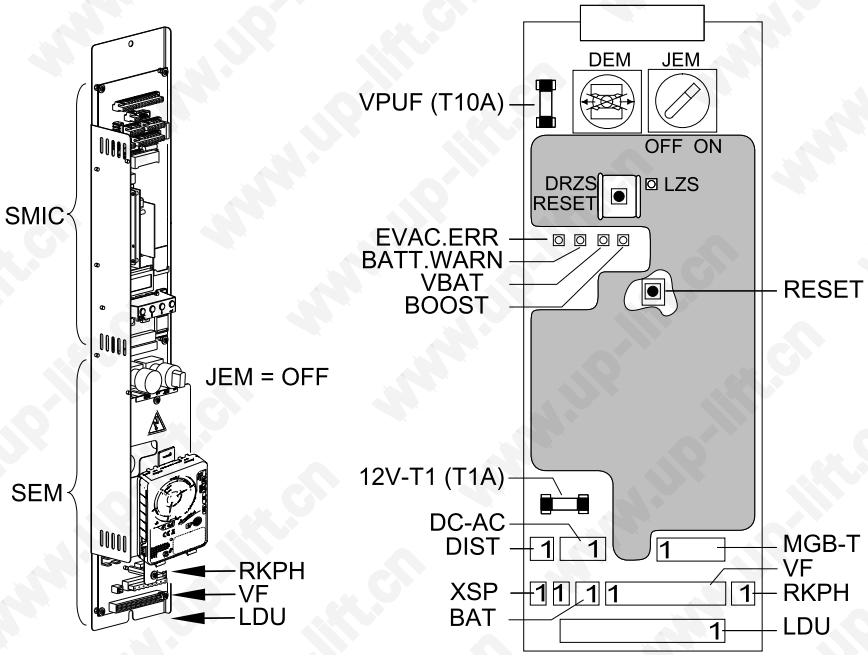

[0000029795]

Only if the evacuation system is installed the following parts are equipped on the SEM:

- DEM
- JEM
- DC-AC.

► SEM: If evacuation system installed, switch JEM = off.

► PCBA SEM: Plug in:

- SEM.LDU from the supply module.
- SEM.VF from the ACVF.
- If evacuation system installed: SEM.RKPH bridge pin 1 → 2.
- SEM.SP.

If option TSD21 and CO BIO 5.7 / CO BIO 5.9: From SPHRB.X1.
If AP: From intercom SMIC.XSP.
If IN: From option ZQF.

► Plug in JHM.

Output from the main switch JH (13, 14) → the connector JHM (SEM. LDU 6, 7)

► SEM: Do not plug in
  – If evacuation system installed: The connector DC-AC in SEM.DC-AC.
  – The connector BAT in SEM.BAT.

5.5 Preparing of SMIC

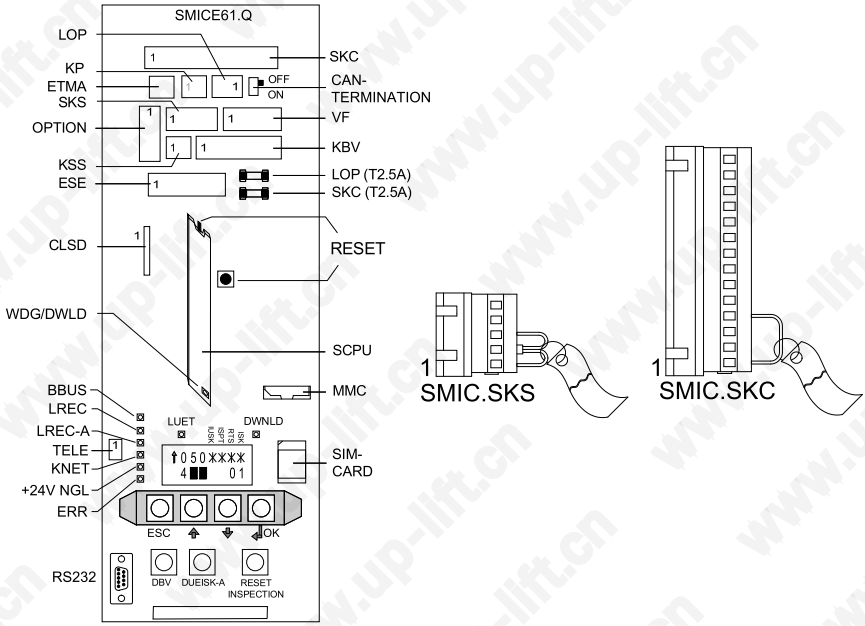

[0000029796]

Temporary or permanent bridges at connectors:

– If the options are not needed during the commissioning = temporary bridged connectors.
– If the options are not needed during the operation = permanently bridged connectors.

► To temporary bridge the STM slack contact, plug in the bridge SMIC. KSS (bridge pin 1 → 2).

► To temporary bridge the overspeed governor contact: Plug in:
  – If no TSD21: SMIC.KBV (bridge pin 1 → 2).
  – If TSD21: SPHRB.KBV (bridge pin 1 → 2).

► If connector SMIC.KP available, plug in bridge pin 1 → 2.

► Plug in connector SMIC.VF from ACVF.

 Copyright © 2015 INVENTIO AG

► Connect the shield from VF cable → ground.

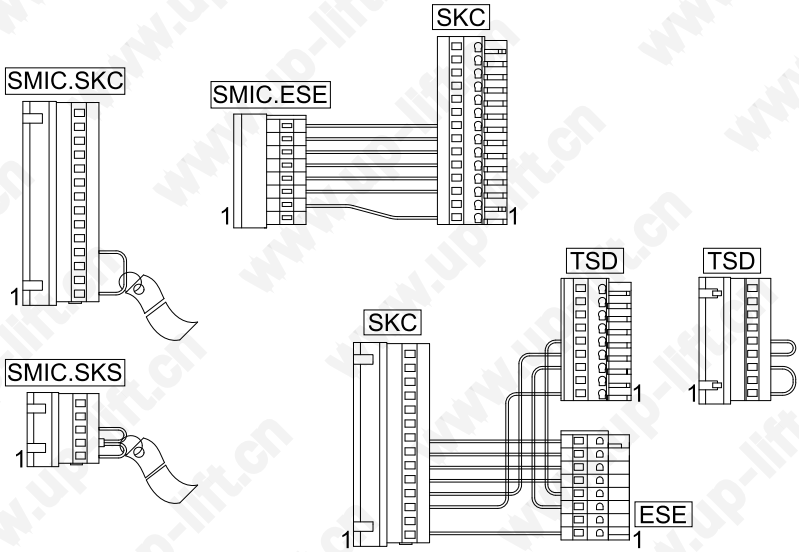

Installation travel kit for TSD [0000029797]

For details see: schematics S 277224

► Plug in the installation travel on car kit ID 55507519 to:
  – SMIC.SKC
  – SMIC.SKS.

► To connect the ESE control panel, plug in SMIC.ESE.

► ESE control panel: Set:
  – JRH = recall.
  – JHM = stop.

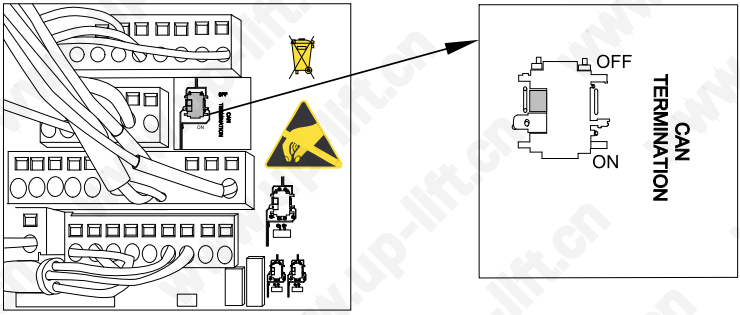

[0000029985]

► SMIC: Set CAN-TERMINATION switch = on.
► Do not plug in LOP.

5.6 Frequency converter

5.6.1 Preparing of frequency converter outside of LDU for CO BIC 5

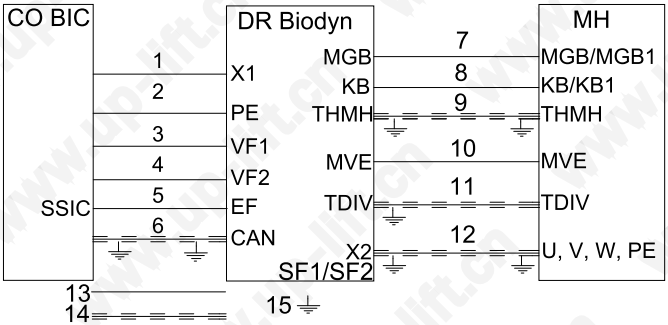

[0000029981]

1	Supply 3L	**10**	Fan supply
2	PE	**11**	Encoder
3 ... 5	Logic parallel	**12**	Supply 3LPE
6	Logic CAN	**13**	Not shielded cable
7	Brake supply	**14**	Shielded cable
8	Brake control	**15**	Shield connected to ground
9	Motor thermostat		

 Copyright © 2015 INVENTIO AG

⚠ DANGER

Hazardous voltage

Contact with live parts will result in electric shock.

Switch off the main switch and de-energize the installation completely before starting to work on the installation.

- ▶ Do not touch live parts.
- ▶ LDU / machine room: To de-energize the installation completely before starting to work on the installation and performing any wiring, switch the main switches = off.
- ▶ LDU / machine room: For your safety, lockout the main switches.
- ▶ To fully discharge the capacitive circuits after switching off the power, wait more than 10 minutes.
- ▶ Supply side of the inverter: Check:
  - – Residual-operated protective (RCD) = type B.
  - – Residual-operated monitoring (RCM) = type B.

5.6.2 Preparing of Biodyn 9/12 C BR

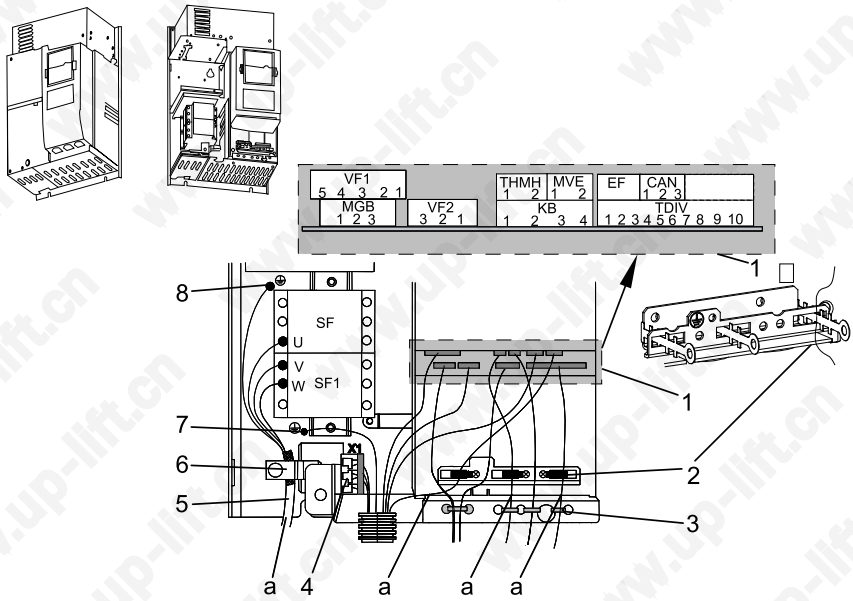

[0000030070]

a	Shielded wire	**5**	Motor cable connected to SF/SF1
1	Input / output PCBA plugs	**6**	Shielding clamp for the motor cable
2	Shielding clamps	**7**	Protective earth connection point for the mains power supply from the LDU
3	Cable tie	**8**	Protective earth connection point for the motor cable
4	X1 mains connector from LDU		

► Check the correct connection of the:
- Cable from the LDU on the input / output PCBA:VF1, VF2, CAN/EF.
- Cable from the motor on the input / output PCBA:MGB, KB, THMH, MVE, TDIV.
- Mains power supply cable from the LDU on X1 (L1, L2 and L3).
- Protective earth connection for the mains power supply from the LDU.
- Motor cable on SF/SF1 (U, V and W).
- Shielding clamp for motor cable.
- Protective earth connection for the motor.
- Shielding clamps for the input / output cable.
- Cable ties.

 Copyright © 2015 INVENTIO AG

5.6.3 Preparing of Biodyn 25/42 C BR

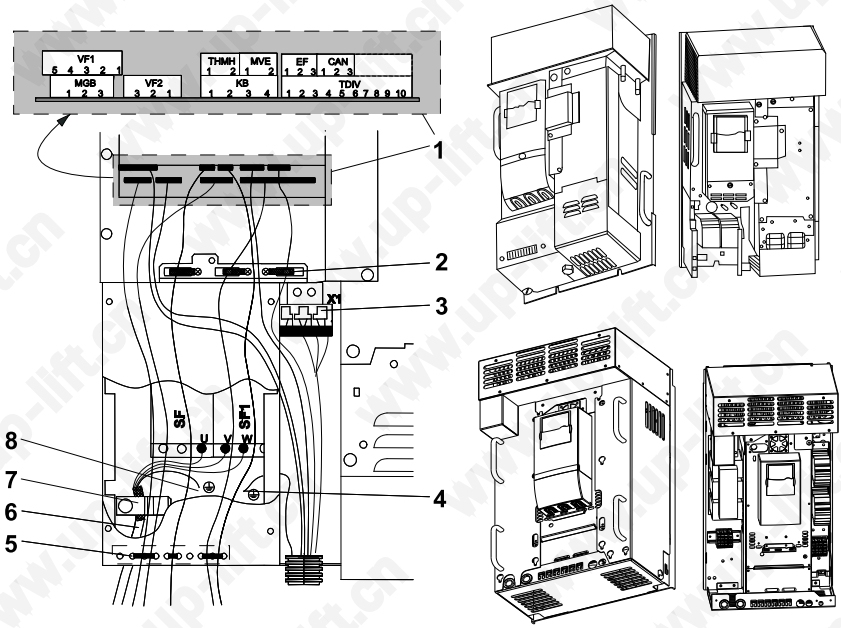

[0000030252]

1	Input / output PCBA plugs	**5**	Cable tie
2	Shielding clamps	**6**	Motor cable connected to SF/ SF1
3	X1 mains connector from LDU	**7**	Shielding clamp for the motor cable
4	Protective earth connection point for the mains power supply from the LDU	**8**	Protective earth connection point for the motor cable

► Check the correct connection of the:
- Cable from the LDU on the input / output PCBA: VF1, VF2, CAN/EF.
- Cable from the motor on the input / output PCBA: MGB, KB, THMH, MVE, TDIV.
- Mains power supply cable from the LDU on X1 (L1, L2 and L3).
- Protective earth connection for the mains power supply from the LDU.
- Motor cable on SF/SF1 (U, V and W).
- Shielding clamp for motor cable.
- Protective earth connection for the motor.

– Shielding clamps for the input / output cable.
– Cable ties.

5.6.4 Preparing of Biodyn 21 C BR CN

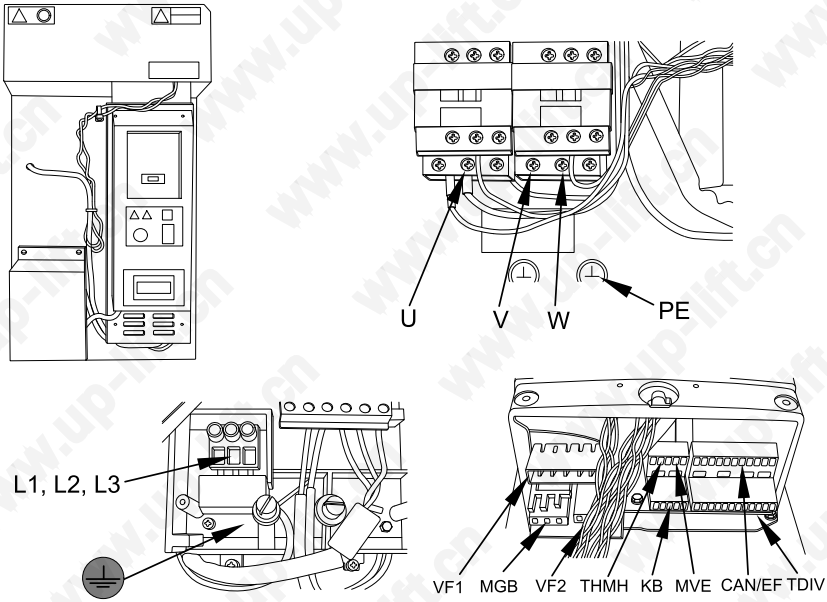

Wiring Biodyn 21 C BR [0000029986]

► Check the correct connection of the:
– Cable from the LDU on the input / output PCBA:VF1, VF2, CAN/EF.
– Cable from the motor on the input / output PCBA:MGB, KB, THMH, MVE, TDIV.
– Mains power supply cable from the LDU on X1 (L1, L2 and L3).
– Protective earth connection for the mains power supply from the LDU.
– Motor cable on SF/SF1 (U, V and W).
– Shielding clamp for motor cable.
– Protective earth connection for the motor.
– Shielding clamps for the input / output cable.
– Cable ties.

 Copyright © 2015 INVENTIO AG

5.6.5 Preparing of Biodyn 36 C BR CN

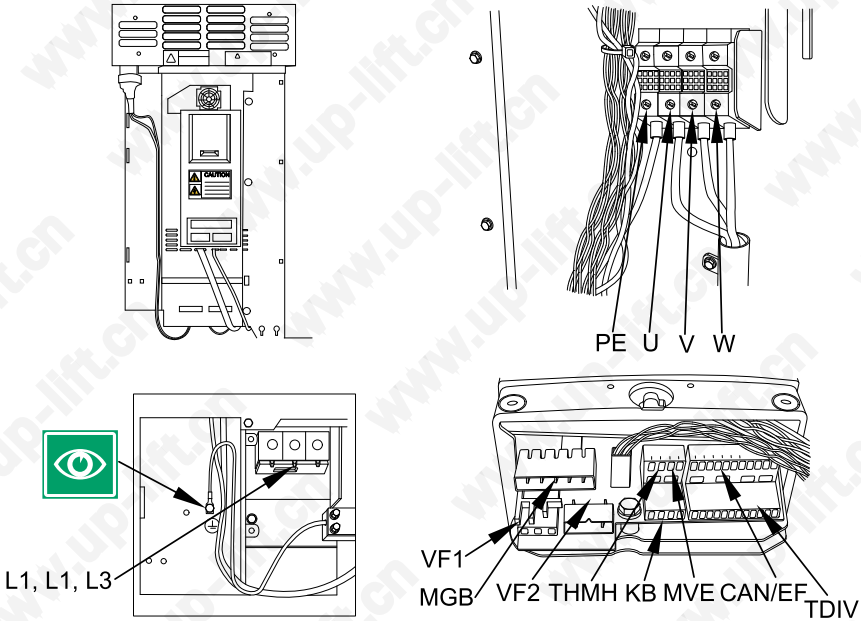

Wiring Biodyn 36 C BR CN [0000029987]

► Check the correct connection of the:
- Cable from the LDU on the input / output PCBA:VF1, VF2, CAN/EF.
- Cable from the motor on the input / output PCBA:MGB, KB, THMH, MVE, TDIV.
- Mains power supply cable from the LDU on X1 (L1, L2 and L3).
- Protective earth connection for the mains power supply from the LDU.
- Motor cable on SF/SF1 (U, V and W).
- Shielding clamp for motor cable.
- Protective earth connection for the motor.
- Shielding clamps for the input / output cable.
- Cable ties.

6 Preparing of CO BIC 6 (LDU)

6.1 CO BIC 6 with LDU

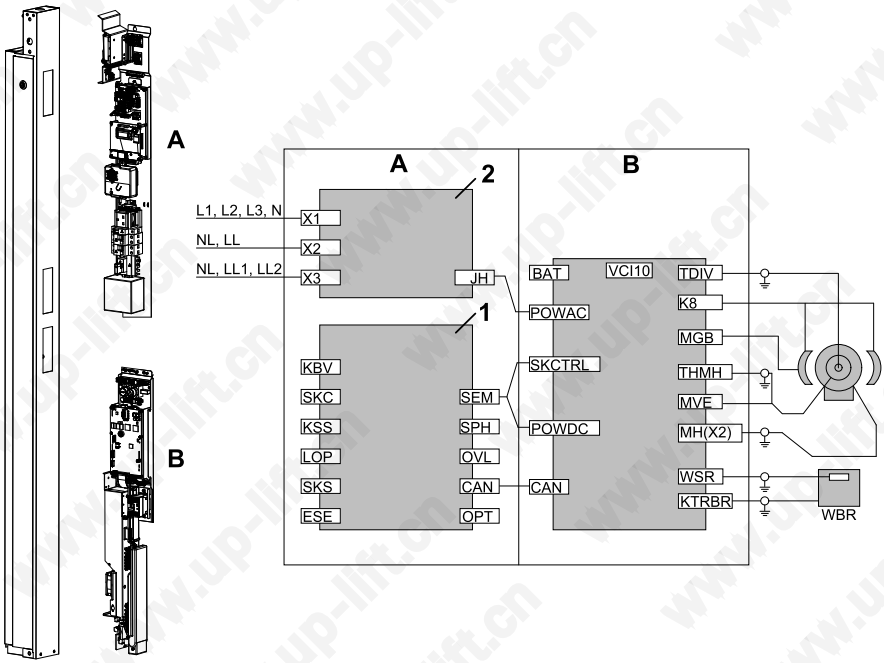

LDU for CO BIC 6 [0000029798]

A	Controller module	**1**	Elevator control
B	Drive module	**2**	Mains

The CO BIC 6.1 includes the controller Bionic 6 and the frequency converter DR VCI10.

- In the LDU are installed:
  - Controller module
  - Frequency converter module
  - Emergency battery — near by the frequency converter module.
- The brake resistor for the frequency converter is installed in the hoistway.

 Copyright © 2015 INVENTIO AG

6.2 Preparing of module CO BIC 6

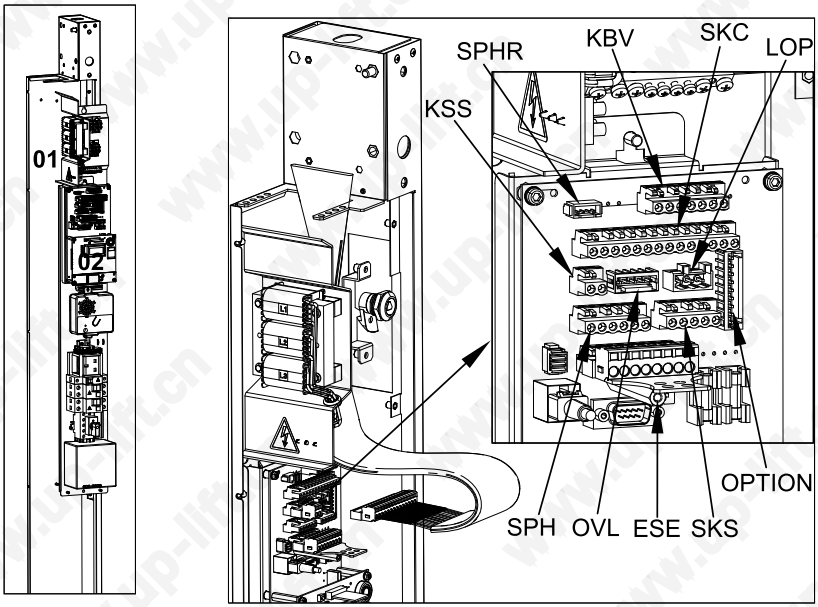

[0000030067]

01 Controller module

02 Drive module

Temporary or permanent bridges at connectors:

– If the options are not needed during the commissioning = temporary bridged connectors.
– If the options are not needed during the operation = permanently bridged connectors.

For details see: Schematics S 277224

► Plug in the temporary bridges:
  – SMICFC.KSS (bridge pin 1 → pin 2).
  – If no TSD21:

SMICFC.KBV (bridge pin 1 → 2).
SMICFC.SPH (bridge pin: 1 → 2, 3 → 4).

  – If TSD21:

SPHRB.KBV (in SPHRB box, bridge pin 1 → 2).
SMICFC.SPH (from SPHRB box).

– If the optional connector are available:

OPTION
SPH
SPHR
OVL.

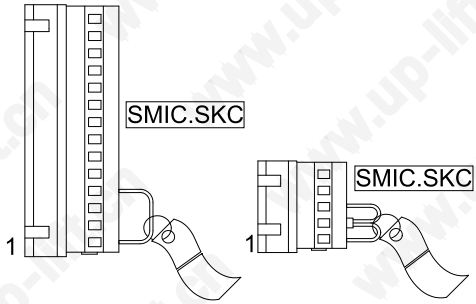

[0000030065]

► Plug in the installation travel on car kit ID 55507519 at:
  – SMIC.SKC
  – SMIC.SKS.
► To connect the ESE control panel, plug in SMICFC.ESE.
► ESE control panel: Set
  – JRH = recall
  – JHM = stop.

 Copyright © 2015 INVENTIO AG

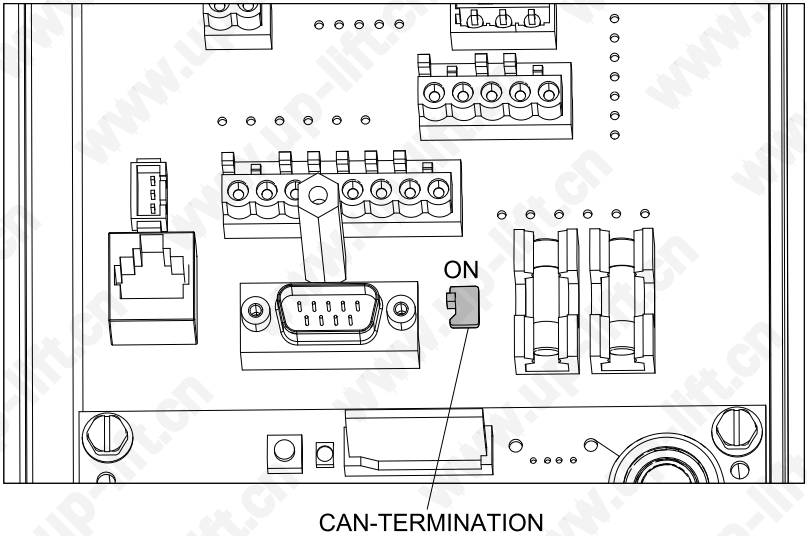

[0000030066]

► SMICFC: Set the CAN-TERMINATION switch = on.
► Do not plug in LOP.

6.3 Preparing of main power supply

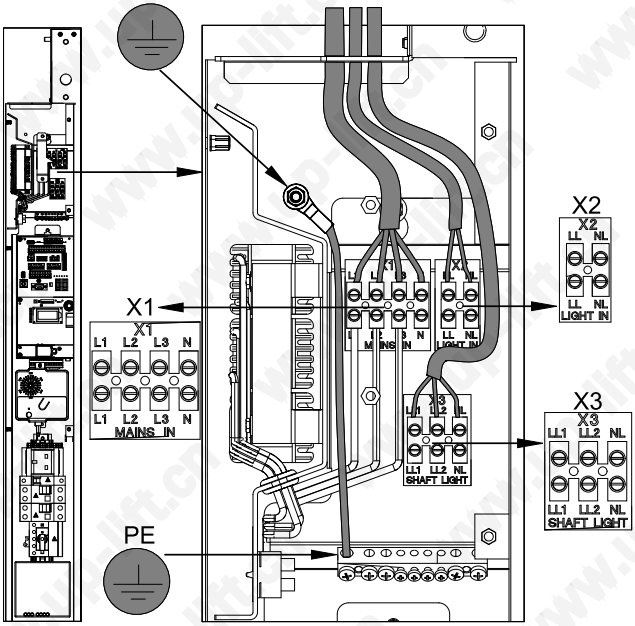

[0000030064]

- ► Switch = off:
  - – JH.
  - – SIL.
  - – SIBS.
  - – JLBS.
- ► Check that the mains are connected / screwed to the end terminal:
  - – X1 = mains power supply (L1, L2, L3, N).
  - – X2 = mains lighting supply (LL, N).
  - – X3 = hoistway lighting (LL1, LL2, NL).
  - – Protective earth PE → the protective earth distribution point.
- ► Do not connect the battery to the inverter in the LDU.

 Copyright © 2015 INVENTIO AG

6.4 Preparing of drive module DR VCI10

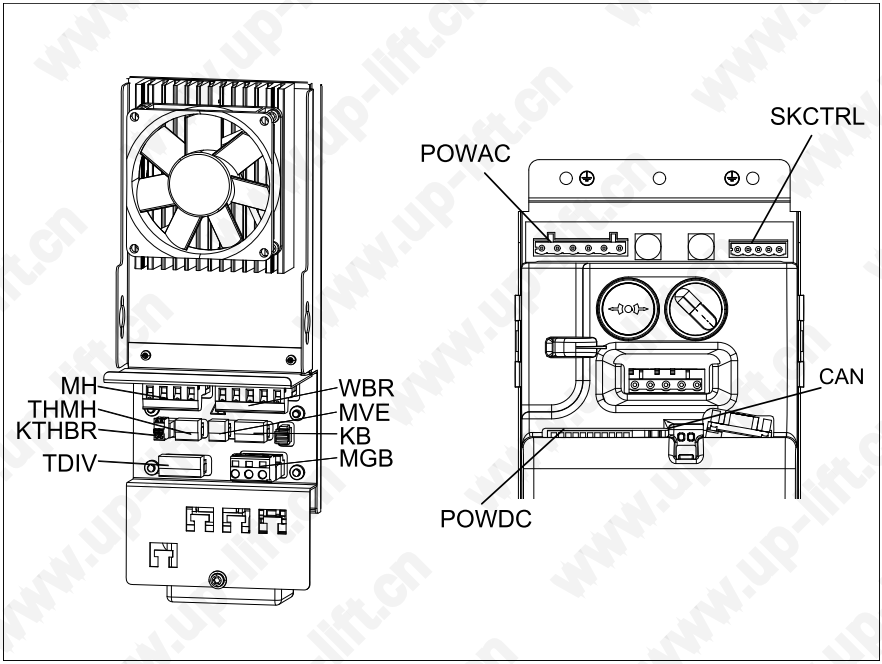

[0000030068]

- ► Cables from the controller module, check the plugs are plugged in:
  - POWAC.
  - SKCTRL.
  - POWDC.
  - CAN.
- ► Cables from the hole in the bottom of the LDU: Check the plugs are plugged in:
  - MVE — motor fan.
  - KB — brake contact.
  - MGB — brake magnet.
  - THMH — temperature sensor in the motor.
  - TDIV — digital encoder for the speed.
  - WBR — drive system brake resistor.
  - KTHBR — temperature sensor at the brake resistor.
  - MH — motor.
- ► Check that the cable shielding has a well conducting connection on the entire screen circumference and is fixed with the conductive cable tie at the bare cable screen of:

– THMH — temperature sensor in the motor.
– TDIV — digital encoder for the speed.
– WBR — drive system brake resistor.
– KTHBR — temperature sensor at the brake resistor.
– MH — motor.

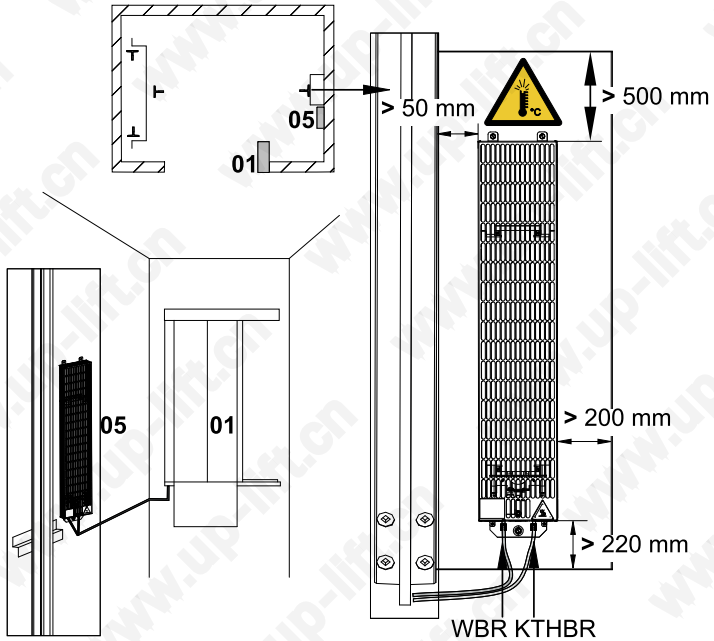

[0000030069]

01 Landing door

05 Brake resistor

► Brake resistor: Check the minimum distances to other components. The brake resistor generates a high temperatures.

 Copyright © 2015 INVENTIO AG

7 Preparing of optional TSD21

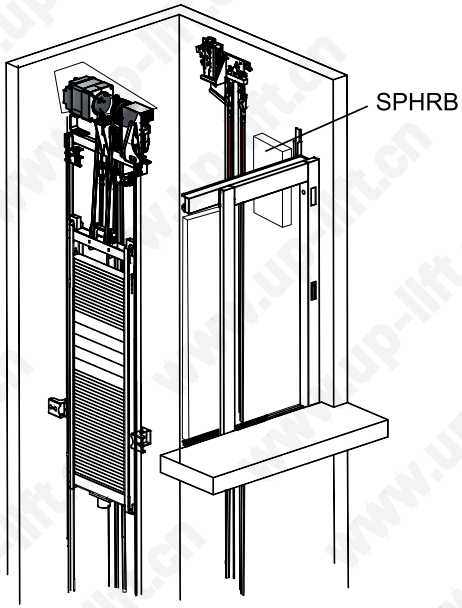

[0000029799]

The temporary safety device for EN81–21 (TSD21) is delivered if:

– Short head room /
– Short pit.

Hoistway head

► Check the installation of the SPHRB box.
► To connect the overspeed governor contact:
  – SPHRB.KBV: Plug in KBV contact.
  – Connector XKBV: Plug in the extension cable SPHRB.XKBV from LDU.SMIC(FC).KBV.
► If CO BIC 5.7 / CO BIC 5.9: Check the wiring according to the documents:
  – J 41141066, TSD21 — Short Head — CO BIC 5.
  – J 41141093, TSD21 — Short Pit — CO BIC 5.

8 Performing of installation travel

8.1 Switching on of power supply first time

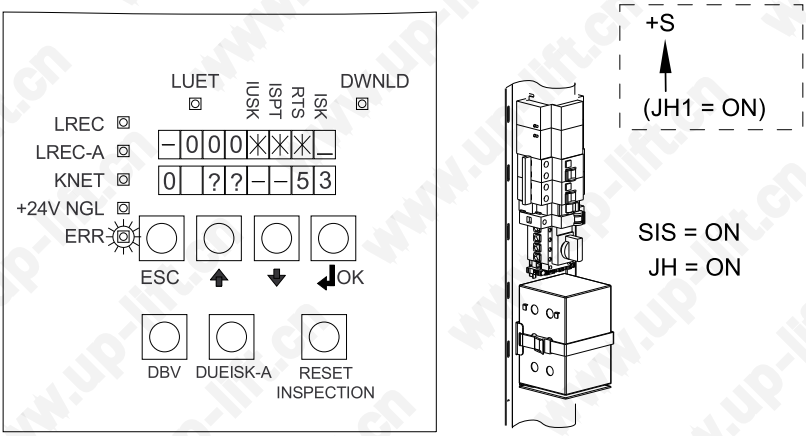

[0000029988]

⚠ DANGER

Rotating machinery

Rotating parts can crush limbs.

- Keep clear of rotating parts.
- Do not wear loose clothing.
- Tie long hair back or tuck it under a cap.

▶ Check that the following components are installed:
  - The main power supply.
  - The power supply for the lighting.
  - The machine is on its final position.
  - The controller cabinet — LDU or MR.
  - The frequency converter is installed.
  - The wiring according to the schematics between the above components.

 Copyright © 2015 INVENTIO AG

► Recall control panel: Switch:
  – JRH = inspection
  – JHM = stop.
► Top of the hoistway: If the LDU on the second top most floor, switch the second main switch JH1 = on.
► Switch the main switch JH = on.
► Switch SIS = on.
► AS.SMIC, check on the HMI the status of the LEDs

LED	Color	Status
24V NGL	Green	On
ERROR	Red	Blinking

HMI: At the second line will be displayed:
– S001r3
– After a few seconds: software version, for example V9.34.04.
– After another few seconds: [0 ?? – – 5 3]
  53 = recall mode

Possible failures if the software version does not disappear:
– CAN bus communication failure between controller and frequency converter
– Frequency converter parameter download failure from the chip card.

► HMI: Check the safety circuit status.

HMI	Description
*** IUSK**	Safety circuit power supply 24 ... 55 VDC
*** ISPT**	Pit contacts in the hoistway
*** RTS**	Landing door contacts

► Frequency converter: Check the green LED = on.

The frequency converter parameters are downloaded automatically from the chip card.

8.2 Checking of direction of motor and encoder

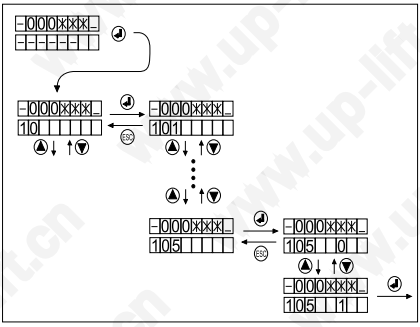

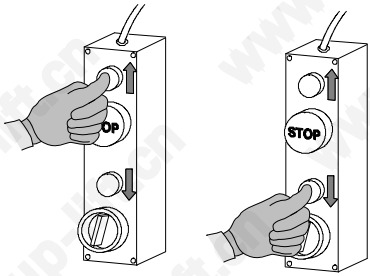

[0000029990]

- ► Check that:
  - – The installation travel mode = enabled
  - – STM = not installed
- ► To enable the installation travel mode, in command 105, set the value = 1.
- ► Recall control ESE: Press the up button.

  The motor starts to turn.
- ► If the motor makes a big noise and stops turning immediately: To change the encoder direction in CF16 PA14, set the value = 1 ↔ 0.
- ► If the motor turns in the down direction: To change the phase direction in CF16 PA15, set the value = 1 ↔ 0.
- ► On the recall control ESE: Press the down button.

  The motor turns in down direction.
- ► Switch = off:
  - – JH.
  - – SIS.

  The motor is ready to install the STM.

 Copyright © 2015 INVENTIO AG

8.3 Performing of installation travel with ESE recall panel

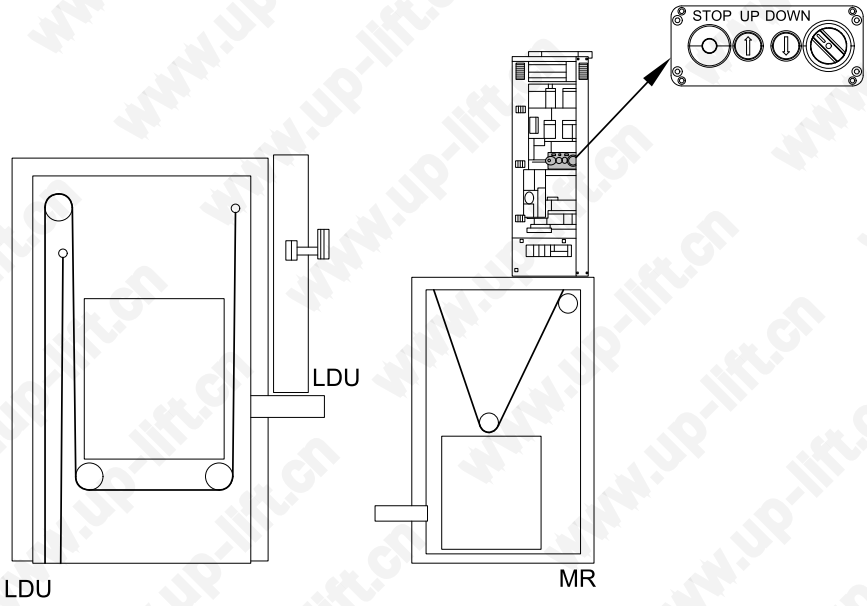

[0000029992]

⚠ WARNING

Sudden car movement after power-up or reset

An elevator power-up or elevator reset can result in sudden movement of the car.

Always activate a stop switch before starting up the elevator or applying a reset.

⚠ WARNING

Overtravel in hoistway head with reduced height

An overtravel of the car exposes any person on the car roof to a crushing hazard.

Check both TSD21 stop brackets in the hoistway head are installed and both locking bolts on the car are in working position before moving the car by installation travel.

⚠ WARNING

Overtravel in pit with reduced height

An overtravel of the car exposes any person in the pit to a crushing hazard.

Check both TSD21 stop brackets in the pit are installed and both locking bolts on the car are in working position before moving the car by installation travel.

NOTICE

Collision of car with misplaced material

A collision causes material damage.

Always check there is no misplaced material in the way of the traveling car before starting an installation travel.

Maximal traveling time for Schindler 3600

If Schindler 3600: The maximal traveling time is limited to 150 seconds for:

- Inspection travel
- Recall travel

Before the maximal traveling time has expired, release the direction button and start a new travel by pressing the direction button again.

Extended inspection

With the chip card option “Extended inspection”, it is possible to travel the car beyond KSE-U.

- Outside the KSE-U, the start upward travel into and inside KSE-U is possible.
- Within the KSE-U, only the start of the downward travel is possible.

► Check the following components are installed before using of the ESE control panel for the installation travel:
  - STM.
  - The machine.
  - The frequency converter.
  - The controller cabinet (LDU or controller cabinet in the MR).
  - The traction beam, structure, floor and roof of the car.
  - The pit set.
  - The buffers for the car and the counterweight.

 Copyright © 2015 INVENTIO AG

– The counterweight and the counterweight is filled with 50 % of the filling material.
– The overspeed governor and the overspeed governor rope are mechanically installed and connected to the safety gear.
– The headroom safety devices with the electrical contacts:

KBV — contact overspeed governor
KSS — contact slack rope for STM
Car components of the temporary safety device TSD21
Hoistway components of the temporary safety device TSD21
Hoistway light.

► AS: Switch = off:
– JH.
– SIL.
– SIS.

► AS.SEM: Switch JEM = off.

Only available if the evacuation system is installed in the controller cabinet.

► AS.SMIC(FC): Check the chip card is installed.

If CO BIC 5.7 or CO BIC 5.9

► Check SEM.BATT = plugged out — battery.

► If evacuation system is installed in the controller cabinet: Check that:
– SEM.DC-AC = plugged out — inverter DC-AC.
– The minus pole of the battery = not connected.

► AS.SMIC: Check the previously installed temporary bridges:

Plug	Description	Bridge
SMIC.SKC	Traveling cable	Pin 1 — 4
SMIC.SKS	– Tension weight – Pit set – KTS	Pin 1 — 2, 2 — 3
SMIC.KP	If buffer contact	Pin 1 — 2

If CO BIC 6.1

► Check that AS.PWRM.BATT = plugged out — battery.

► AS.SMICFC: Check the previously installed temporary bridges:

Plug	Description	Bridge
SMICFC.SKC	Traveling cable	Pin 1 — 4
SMICFC.SKS	– Tension weight – Pit set – KTS	Pin 1 — 2, 2 — 3
SMICFC.SPH	If TSD21	Pin 1 — 2, 3 — 4
SMICFC.SPH	If no TSD21	No temporary bridges

Safety devices in the headroom

► KSS: SMIC(FC): Plug in SMIC(FC).KSS.

► KSS1 and KSS2:

– SMIC(FC): Plug in the interface Y-cable at SMIC(FC).KSS.

– Into the interface Y-cable:

Plug in KSS1.
Plug in KSS2.

► SMIC(FC): Plug in SMIC(FC).KBV.

– If the counterweight with safety gear, connect the safety gear contact KFG in serial with car overspeed governor contact KBV.

– If TSD21, plug in:

The cable from SPHRB.XKBV.
The safety device to SPHRB.KBV.

 Copyright © 2015 INVENTIO AG

8.4 Performing of installation travel with ESE recall panel on car roof

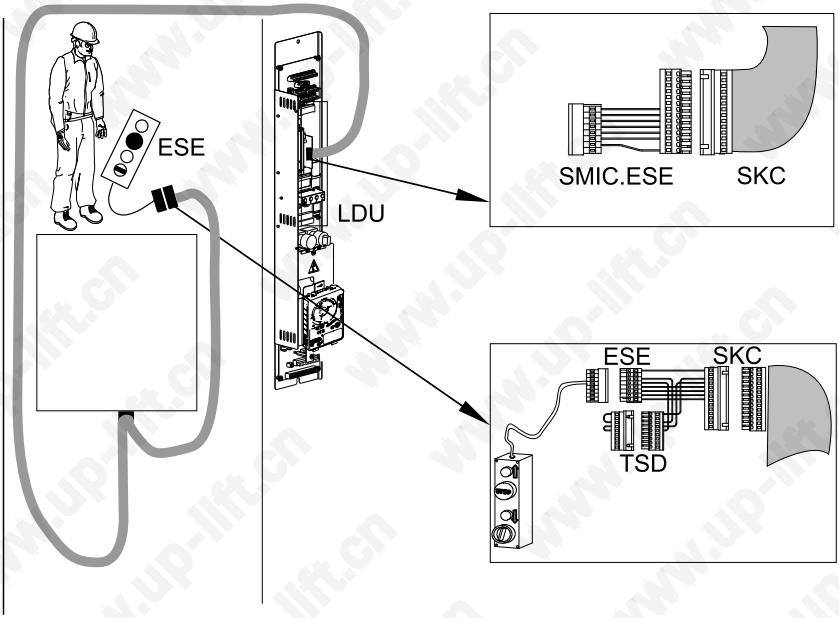

[0000029982]

Connecting of ESE control panel via the traveling cable

The recall control panel ESE is used to move the car from the car roof or from the landing without any electronic installed on the car.

► Check that the installation travel on car kit (ID 55507519) is available.

► AS.SMIC(FC):

- Plug out the recall device ESE (ESE — SKC).
- Plug in the interface kit SMIC.ESE (SMIC.ESE — SKC).
- Plug in the traveling cable to the interface kit SKC (SMIC.ESE - SKC).
- Plug in the interface kit SKC (ESE - SKC) to the other side of the traveling cable.
- Plug the recall control panel ESE to the interface kit ESE (ESE – SKC).

► Check the connection:

- SMIC(FC).ESE.SKC → traveling cable → connector SKC – ESE →recall control panel ESE.
- If no TSD21: On the interface kit SKC-ESE, plug in the bridge connector TSD on the adapter branch TSD.
- If TSD: On the interface kit:

Supervision contacts KSR and KSR-A from the blocking device TSD21 below the car.

Plug out the bridge connector TSD.
Plug in the cable TSD.

Checking of the ESE safety contacts

► Recall control panel: Switch:
- JRH = inspection.
- JHM = stop.

► Switch = on:
- JH.
- SIS.

HMI indicates:
- [– – – – – –]
- [0 ?? – – 5 3] (after a few seconds)
  53 = recall mode active

► To check that the car is not moving:
- ESE: Press the up direction button DRH-U.
- ESE: Press the down direction button DRH-D.

Checking of traveling direction

► ESE: Set the switch JHM = released.

► To check that the car is moving:
- Downwards: Press shortly the down direction button DRH-D.
- Upwards: Press shortly the up direction button DRH-U.

► If the car moves in the wrong direction:
- Check the internal wiring of the recall control panel ESE.
- Repeat the direction of motor and encoder checks.

► Recall control panel: Set the switch JHM = stop.

► Switch = off:
- JH.
- SIS.

Further installation travel can be done from the car, by traveling through the hoistway.

 Copyright © 2015 INVENTIO AG

8.5 Performing of installation travel with REC inspection panel

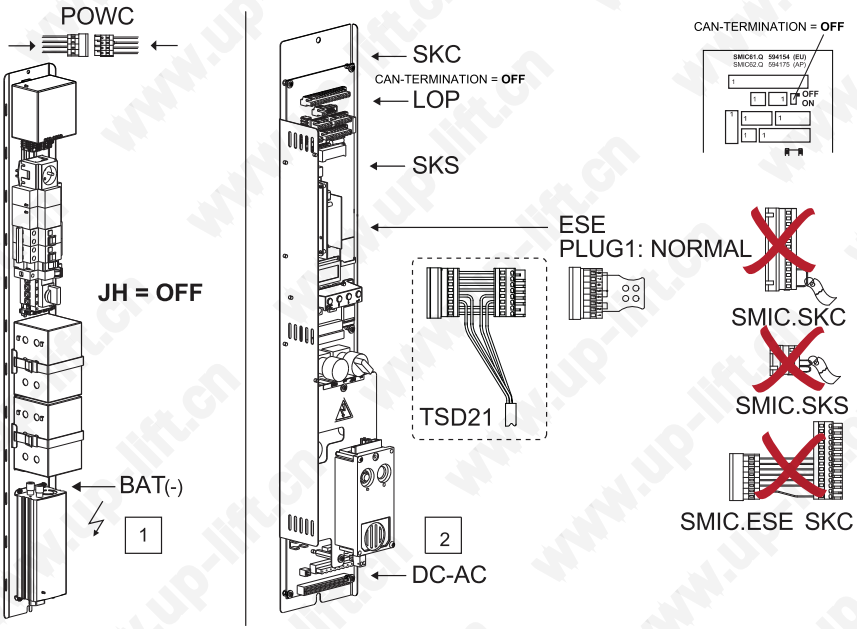

[0000029984]

► Check that the following components are installed before using the REC for the installation travel:
- STM.
- The machine.
- The frequency converter.
- The controller cabinet (LDU or controller cabinet in the MR).
- The traction beam, structure, floor and roof of the car.
- The pit set.
- The buffers for the car and the counterweight.
- The counterweight and the counterweight is filled according to the commissioning order, to achieve the balancing to the car.
- The overspeed governor and the overspeed governor rope are mechanically installed and connected to the safety gear.
- The car safety devices with electrical contacts:

KCBS
KF

KNE
SKC
KNA

– The headroom safety devices with the electrical contacts are installed:

KBV — contact overspeed governor
KSS — contact slack rope for STM
Car components of the temporary safety device TSD21
Hoistway components of the temporary safety device TSD21
Hoistway light.

– The traveling cable is installed at the definitive position.
– The car controller box CCU or OKR is installed.
– If CO BIC 5.9: The COP PCBA must be installed and connected.

  If the COP is not connected the control will not start up.

► The rest of the components will be installed during the installation phase, according to the installation sequence:
– Car door:

  The door clutch is blocked in the closed position.
– Car door safety contacts:

KTC
UET.

– Landing door:

KTS.

– Hoistway safety devices:

JHSG
KSSBV
KP
KPG.

– Hoistway information.
– Hoistway wiring.
– Alarm system.

 Copyright © 2015 INVENTIO AG

9 Tasks before learning travel

9.1 Checking of components

9.1.1 Preparing of controller cabinet for learning travel (LDU and MR)

Connection must be done in correct sequence: Switch JH = off, → connect battery and inverter.

► Switch = off:
  – JH.
  – SIS.
  – SIL.

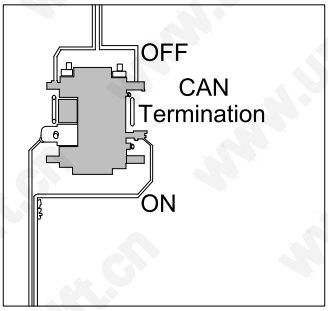

[0000030072]

► SMIC(FC): Set CAN-TERMINATION = off.

Battery and inverter

► If CO BIC 5.7 / CO BIC 5.9 and the evacuation system is installed in the AS:
  – AS: Connect the minus pole of the battery to the inverter DC-AC.

    There may be a small spark when connecting the wire.
  – AS.SEM: Plug in the connector SEM.DC-AC.

► If CO BIC 5.7 / CO BIC 5.9: AS.SEM: Plug in the battery connector to SEM.BAT.

► If CO BIC 6.1: AS: Plug in the battery connector to PWRM.BATT.

Traveling cable

► AS.SMIC(FC): Connect the traveling cable to the PCBA SMIC(FC):
  – SMIC(FC).POWC / POWAC — power supply
  – SMIC(FC).SKC — safety circuit.

► AS:

– Plug in the connector XTT.
– Connect the protective earth to the AS.

Safety circuit

► AS.SMIC(FC): Remove the temporary bridges.
► AS.SMIC(FC): Plug in the following safety devices:
– SMIC(FC).SKC — traveling cable.
– SMIC(FC).SKS — tension wight, pit set and KTS.
– If KP option: SMIC.KP — buffer safety circuit.

Recall panel ESE

► ESE recall panel: Check the status:
– JRH = normal
– JHM = released.

If installation with normal headroom or pit (no TSD21)

► Plug in at AS.SMIC.ESE:
– PLUG1.NORMAL or
– Recall control panel.

If installation with reduced headroom or pit (TSD21)

► AS.SPHRB.XHK: In the SPHRB box, plug in the traveling cable to the connector CCU.XHK.
► If SMIC.ESE (CO BIC 5.7 or CO BIC 5.9):
– SMIC.ESE: Plug in the interface Y-cable.
– Plug into the Y-cable: PLUG1.NORMAL or ESE control panel.
– To connect and fix the Y-cable to the SPHRB box, plug and fix with glue the connector SMIC.ESE to the SMIC.ESE.

  The plug must be fixed, so that it can not be removed anymore.

  PLUG1.NORMAL or the recall control ESE is only allowed to be plugged if the safety circuit is supervised by the SPHRB box.
– Plug in the cable from SPHRB box connector X1 → SEM.SP.
– Check the wiring and connections according the embedded documents:

J 41141066 TSD21 short head.
J 41141093 TSD21 short pit.

 Copyright © 2015 INVENTIO AG

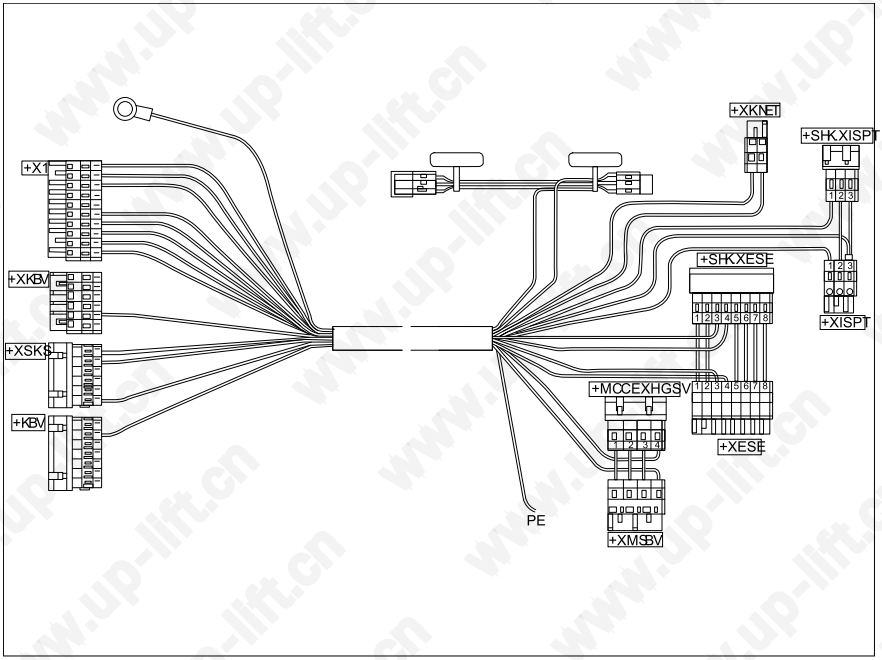

[0000032887]

- ► If SMICFC.ESE (CO BIC 6.1): Plug in:
  - SMICFC.ESE: Connector from PLUG1.NORMAL or ESE recall panel.
  - SMICFC.SPH: Connector from SPHRB.
  - SMICFC.SPHR: Connector from SPHRB.
  - SMICFC.KBV: Connector from SPHRB.
  - All remaining connectors.

LAS option

- ► If AS.SMIC and LAS option: Connect the LAS wire at pin 4 of the OPTION socket.

9.1.2 Preparing of car roof and hoistway information for learning travel

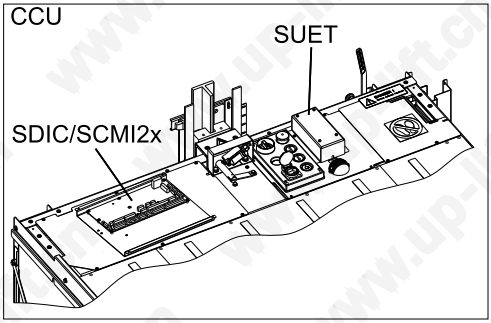

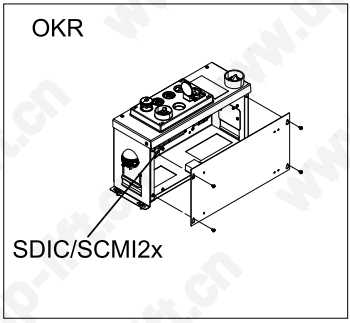

[0000029991]

► REC inspection panel, check:
  – JREC = inspection.
  – JHC = stop.

SDIC (if CO BIC 5.7 or CO BIC 6.1)

► SDIC, check the connectors are plugged in:
  – UCC — KF, DA-D and LMS.
  – REC — REC inspection panel.

► SDIC, check the status of the LEDs:

LED	Status	Description
24V	On	24 VDC from LDU
12V-NSG	On	12 VDC from the emergency power supply on LDU
3.3V / 5V	On	Voltages from SDIC
WDOG	Blinking	Normal operation
ERROR	Off	Normal operation

SCMI2x (if CO BIC 5.9)

► SCMI2x, check the connectors are plugged in:
  – UCDA — alarm button DA-D.
  – SKUCC — safety gear contact KF, KF1.
  – SPI — connection from SCCI.SPI.
  – SK_REC — REC panel.
  – LMS — load measurement system.
  – LINK — connection from SCCI.LINK.

 Copyright © 2015 INVENTIO AG

Safety circuit (SDIC or SCMI2x)

► Check the correct installation, adjustment and wiring of:

- KNE.
- If the bottom floor and the top floor on different sides: 2KNE.
- KTC — safety contact from the car door.
- If option car dumping device CDD: Plug the connectors of CDD in series to the KTC contact.
- JHC2, if JHC2 is not available: Inset a jumper.
- If available KCBS.
- SKC — traveling cable.
- If V15: Connect the adapter cable SKC-CANT Id. No. 57813959:

Use CANT = first door.
Use CANT1 = if available second door.

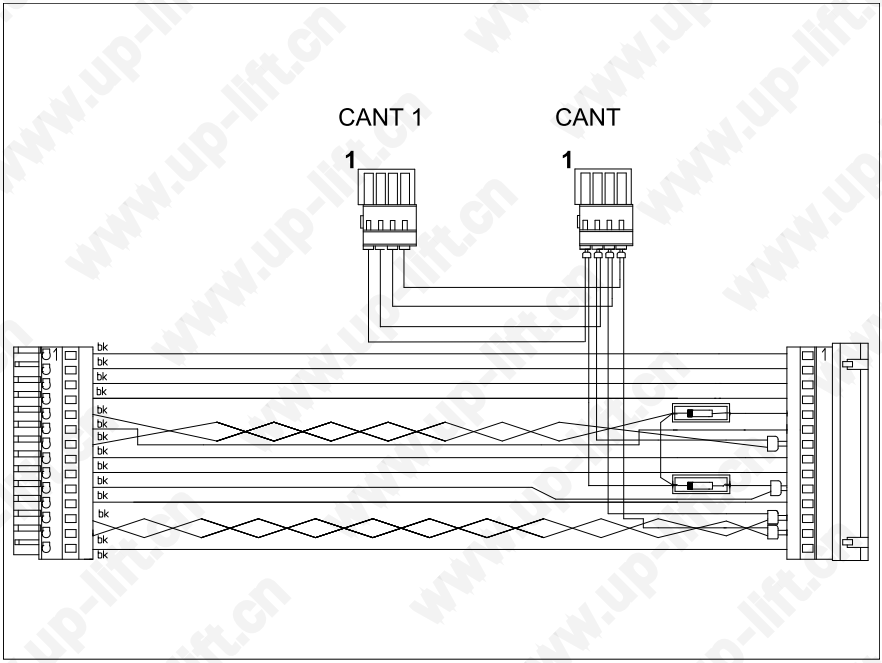

CANT adapter cable [0000030073]

Hoistway information (SDIC or SCMI2x)

► Check the correct installation and wiring of:

- KSE-U magnetic switch.

- KSE-D magnetic switch.
- PHS — shaft information sensor.

Car door, COP and alarm (SDIC or SCMI2x)

► Check the correct installation and wiring of:
- XCOP — check the grounding with the clip on the housing of the CCU.
- If MIL: XMIL.
- DOOR — door contacts from the door drive.
- RPHT — photocell or light barrier from the car door.
- If alarm horn: SOA.
- If intercom: GNT — traveling cable for intercom.

Power supply (SDIC or SCMI2x)

► Check the correct installation and wiring of:
- POWC — traveling cable for power supply.
- POWT — power supply for the car door drive.
- PC — power supply for the socket.
- LC — car light.
- If fan on car option: MVEC.

Optional second door (SDIC or SCMI2x)

► Check the correct installation and wiring of:
- 2KTC — remove the jumper 2KTC and plug in 2KTC.
- 2PHS.
- If V15: Do not connect 2DOOR.
- If not V15: 2DOOR.
- 2RPHT.

Optional door pre-opening (SDIC or SCMI2x)

► If SUET, check the correct installation and wiring of UET.

Optional door pre-opening (SUET)

► Check the correct installation and wiring of:
- XSCUET.
- XUET.
- XPHIO.
- XPHUET — hoistway information cables from the photocell.
- If second car door: 2XPHUET.
- Cable from UET on SDIC or SCMI2x is plugged in to:

 Copyright © 2015 INVENTIO AG

XSCUET.
XUET.
XPHIO.

Door drive

► If door drive Fermator VVVF-x, check the connections for correct installation and wiring:
- VVVF4.5 ... 7.
- VVVF4.8 ... 12.
- VVVF4.21 ... 25.
- VVVF4.30 ... 41.

► If door drive Sematic SDS DC-PWN, check the connections for correct installation and wiring:
- DC-PWN: F, N and protective earth.
- DC-PWN: 3, 5, 15, 22 and 38.
- DC-PWN: 1, 2 and 4.
- DC-PWN: 16 ... 19 and 34 ... 36.

Optional TSD 21

► If reduced headroom or / and reduced pit:
- Traveling cable on car roof, plug out the “installation on car roof kit” from: KSR and KSR-A.

KSR.
KSR-A.

- CCU or OKR, plug in the wire-to-wire connector TSD from the REC inspection panel to:

KSR.
KSR-A.

- CCU or OKR.XHK, plug in the connector XHK of the additional traveling cable from the SPHRB box.
- CCU or OKR, plug in the connectors KSERE-U and KSERE-D.

Optional relevelling and blind floor

Depends on the installed options, the following shaft information readers must be present:

PHNR-U/D = Hoistway information relevelling (up /down)

PHS-B = Hoistway information blind floor

PHS-U/D-B = Hoistway information blind floor and relevelling (up/down).

► If PCBA SIAP is installed on SDIC: Check the shaft information readers are installed:
  – SIAP.PHNR-U.
  – SIAP.PHNR-D.

► If PCBA SIEU is installed on SDIC and options are present, check the shaft information readers are installed:
  – SIEU.PHNR-U.
  – SIEU.PHNR-D.
  – SIEU.PHS.
  – SIEU.PHS-B.
  – SIEU.PHNR-U-B.
  – SIEU.PHNR-D-B.
  – If second access side: SIEU.2PHNR-U.
  – If second access side: SIEU.2PHNR-D.
  – Connect the cable from SDIC.PHS to SIEU.SDIC-PHS.

Lift alarm

► If ETMA-CAR and ETMA-MR (CO BIC 5.7 / CO BIC 6.1), check the connectors and plug in the connectors on the embedded telemonitoring and alarm ETMA:
  – ETMA-CAR.
  – ETMA-MR.

  For more information see document inclosed in the ETMA package:

  EJ 41700380.

► If SCMI2x (CO BIC 5.9), check the connectors and plug in the connectors on the lift alarm:
  – ETMA-LINK — from GNT1 to GNT2.
  – LINK — from SCCI.LINK.

Final checks

► Check all protective earth wires are connected to the relevant connecting points.

► Check the hoistway information magnets for correct magnetic polarity, installation and adjustment:
  – N = north polarity.
  – S = south polarity.

 Copyright © 2015 INVENTIO AG

9.1.3 Checking of car operating panel

► Check that all car operating panels COP are installed.

► If second COP: Check:

– The connecting of the COP according to the schematics.

Output COP1: Plug in the connector from XCOP2.
Input COP2: Plug in the connector from XCOP.

– That the cable is grounded to the metallic COP frame with the provided clip.

► If SCOP / CANCP (CO BIC 5.7 or CO BIC 6.1): Check the correct installation and wiring of:

– XCOP.
– XTELA — connection from ETM-CAR, X1–1–6.
– Optional COP5x PCBA SCOP:

XKEY1 — JRVC, JNFF JDC, ...
XKEY2 — JRVC, JNFF JDC, ...
...

– Optional FIGS PCBA CANCP:

IN1 — JRVC, JNFF JDC, ...
IN2 — JRVC, JNFF JDC, ...
...
VCA — voice announcer.

► If SCCI (CO BIC 5.9): Check the correct installation and wiring of:

– XCOP.
– SPI — connection from SCMI.
– LNC — light sensor and emergency light.
– LINK — connection from SCMI.LINK.
– Optional FIGS PCBA SCCI:

IN1 — JRVC, JNFF JDC, ...
IN2 — JRVC, JNFF JDC, ...
...
EXT-MIC — microphone.
EXT-LS — loudspeaker.

9.2 Checking of REC inspection control station

► CCU/OKR.REC: Set the JHC = stop.
► AS: Switch = on:
– JH
– SIS.

HMI indicates: [0 ?? – – 5 1]
51 = installation travel mode active
After a few seconds: controller = operational.

► CCU/OKR.REC: Check the car is not moving:
– Press shortly the up direction button DREC-U and if available DREC-E simultaneously.
– Press shortly the down direction button DREC-D and if available DREC-E simultaneously.

Check of travel direction

► CCU/OKR.REC: Set the JHC = released.
► CCU/OKR.REC: To check the car is moving:
– Downwards: Press shortly the down direction button DREC-D and if available DREC-E simultaneously.
– Upwards: Press shortly the up direction button DREC-U and if available DREC-E simultaneously.
► If the car moves in the wrong direction:
– Check the internal wiring of the inspection control station REC.
– Repeat the checks:

Encoder direction.
Phase sequence.

► REC: Switch JHC = stop.
► Switch = off:
– JH.
– SIS.

Further installation travel can be done from the car, by traveling through the hoistway.

► If CDD and error 002 elevator safety chain: CF03 PA8: Increase the door debouncing time step by step until the error disappears.

 Copyright © 2015 INVENTIO AG

9.3 Commissioning of car door drive

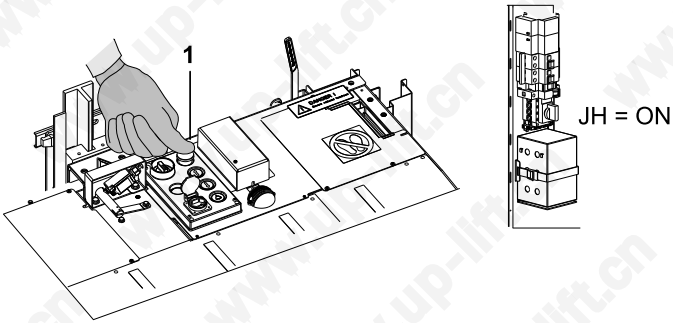

[0000030075]

- ► Check that:
  - – The complete car door including the car door drive is installed.
  - – The KTC is correctly adjusted.
  - – The wiring of the car door is done, according the schematics.
- ► Check that the emergency stop button = pressed.
  - – Recall control station /
  - – Inspection control panel.
- ► Switch JH = on.

9.3.1 Commissioning of Fermator car door drive

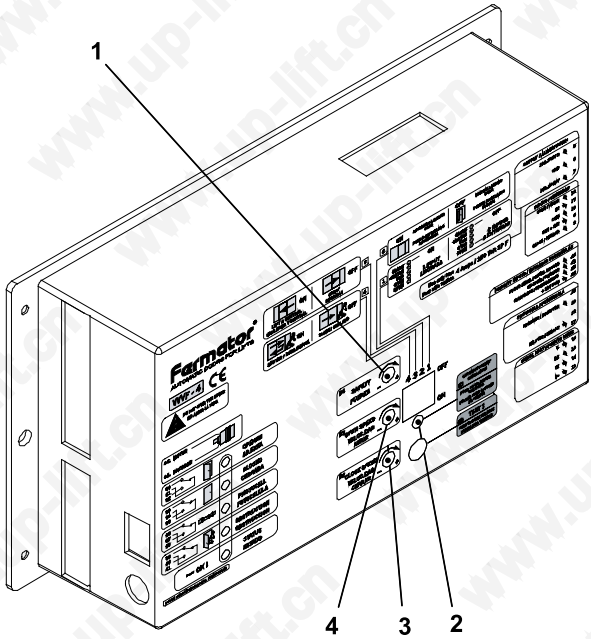

[0000030076]

1	SAFETY potentiometer	**3**	OPEN SPEED potentiometer
2	AUTO ADJUSTMENT button	**4**	CLOSE SPEED potentiometer

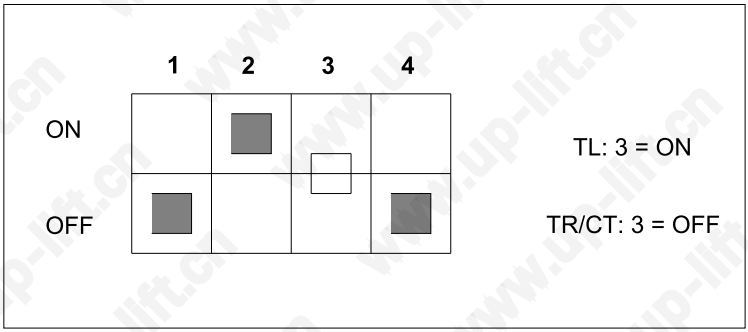

DIP switches on the Fermator car door drive [0000030077]

Do not change the setting of the DIP switches. They are pre-adjusted by the factory.

► Check the DIP switch setting.

 Copyright © 2015 INVENTIO AG

► Switch door frequency convert = on.
► To adjust the door, press the AUTO ADJUSTMENT button.

Car door and landing door must be coupled.

► Check the closing force limiter.
  – To adjust the closing force limiter, use the SAFETY potentiometer.
► Check the door open speed.
  – To adjust the door opening speed, use the OPEN SPEED potentiometer.
► Check the door closing speed.
  – To adjust the door closing speed, use the CLOSE SPEED potentiometer.

9.3.2 Commissioning of Sematic car door drive

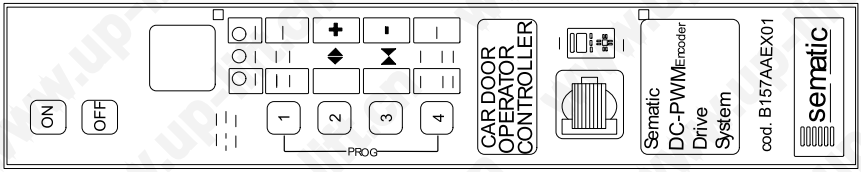

[0000030078]

– The self-learning cycle allows the door drive controller to store the running distance between the closing and opening limit.
– The self-learning cycle is shown on the door controller indicated as “SL”.
– Every time the system is re-powered (for instance after power supply interruption) it performs a reset cycle.

  For example: The door drive searches the closing limit at low speed, this is not a self-learning cycle.
– The self-learning cycle must be carried out with the operator coupled to a landing door.
– If a car door locking device is installed, the self-learning cycle must be carried out inside the lock release zone of the landing doors, because this device prevents the car door opening.
► Check:
  – During the self-learning cycle, carefully that the door panels slide freely and that the door operator completes its total expected travel.

Self learning cycle in manual mode

► Switch the door controller = on.
► To switch the door controller from automatic to manual mode, press the key 4 for a while (approximately 3 seconds).

LED	Color	Status
AUTO	Red	Off
MAN	Red	On

► To start the self-learning cycle:
– Press the key 1 (self learn) for a while.
– Press the key 2 to start the opening operation.

During this operation please check carefully that the operator completes its total expected travel.
When an opening command is given, the door controller carries out an opening cycle at low speed.
The door controller indicates flashing SL.

– To start the closing operation, press the key 3.

When a closing command is given, the door controller carries out a closing cycle at low speed.
The door controller display indicates SL or remains in closed position.
At the end of the opening cycle, the self-learning cycle is complete. – The indication SL disappears. – The indication oP appears.

– To activate the automatic mode, press key 4 for a while.

Self learning cycle in automatic mode

► Check that the AUTO LED = on.
► To start the self learning cycle, press the key 1 (self learn) for a while.

The door close and door open signals are coming from the elevator controller.

Display information

In automatic and manual mode the door controller will indicate the following display:

 Copyright © 2015 INVENTIO AG

Display	Description
“OP”	Door opening (flashing display)
OP	Door opn
“CL”	Door Closing (flashing display)
CL	Door Closed
SL	Self-Learning operation
FC	Self-Learning
AL	It signals an alarm and flashes giving the code of the recognized alarm.
IM	Reversing system on

– The instruction and diagnostic label is attached to the door drive, for operation.
– The diagnostics operation is defined in: DO SEB/SEC Door Drive. Diagnostic, K 41352024.

9.3.3 Commissioning of V15 car door drive

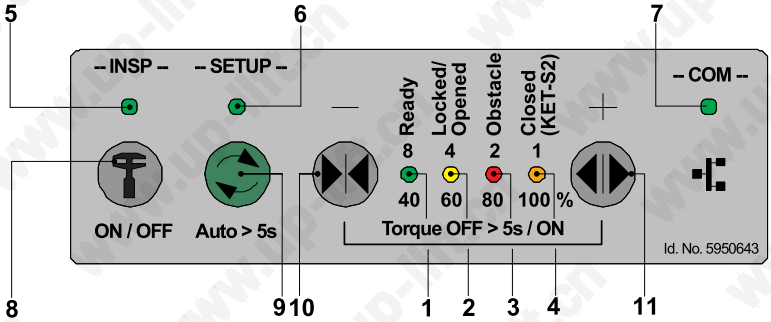

[0000030080]

1 LED Ready
2 LED Locked/Opened
3 LED Obstacle
4 LED Closed (KET-S2)
5 Inspection LED INSP
6 Setup LED SETUP
7 CAN communication LED COM
8 Inspection button INSP
9 Setup / auto setup button SETUP
10 Button DRET-S
11 Button DRET-O

While the auto setup is in progress, all safety devices are enabled (for example, RPHT, KSKB, KOKB). Activation of any of the safety devices will interrupt the setup procedure.

Auto setup

► Check that the inspection top of car JREC = on.
► Switch the power JHT = on.
► To enable the inspection of the door, press the button INSP.
► Check the following status of the LED:

LED	Status
INSP	On
Setup	Off
Ready	On
Locked/Opened	Blinking slowly or On
Obstacle	Off
Closed (KET-S2)	If the door panels are closed = on
COM (Communication)	On — not flashing

► Lock the car door.
  – If the car door not locked, press the DRET-S button until LED Locked/ Opened = on.
► Close the landing door(s) manually.
► To disable the inspection door, press the INSP button.
LED INSP = off.
► Inspection control station: To move the car to the door zone, press the DREC-U/D until the blue LUET LED on the SALSIS / PHS main sensor indicates that the car is in the door zone.
► To enable the door inspection, press the INSP button.
LED INSP = on.
► Run AutoSetup function:
  – To indicate that the AutoSetup is in progress, the LED SETUP = blinking.
  – The door opens for a small distance.
  – The door locks.
  – The door opens, closes 1st time with referencing speed.
  – The door opens, closes 2nd time with red. normal speed.
  – The door opens, closes 3rd time with final normal speed.

 Copyright © 2015 INVENTIO AG

– To indicate that the AutoSetup is successfully finished, the LED SETUP = off.

► If the AutoSetup failed due to any reason: To clear the error, press the Setup button.

The LEDs and Setup are blinking fast and showing a binary blinking code.

► Check the motion and performance.

– To open, to close or to stop the door, press the DRET-O / DRET-S buttons.
– Check the motion while fully opening / locking 2 ... 3 times.
– Check the stopping while opening at full speed (approximately 50 %).
– Check the stopping while closing at full speed (approximately 50 %).

► To define the opened position, open the car door.

– To fully open the door, press the DRET-O button.
– To setup the opened position, press the Setup button.
LED SETUP = on.
– To place panels flush to frame, use the DRET-S / DRET-O buttons.
Panel moves real time in 1 mm increments / decrements.
– To store actual opened position, press the Setup button.

If no action is performed on HMI for 30 seconds, the actual position will not stored.
LED SETUP = OFF.

► Check the car door to landing door alignment and the clutch motion.

– Press the DRET-S button until the LED Locked/Opened = on.
– To open the clutch, press the DRET-O button for less than 0.2 s.
– Check for no motion on landing and car panels.
– Repeat the locking, unlocking process 2 ... 3 times.

If the car to landing door alignment is correct, no door motion is visible.

► Define the door opening and closing speed.

– Press the DRET-S button until the LED Locked/Opened = on.
– To setup the speed, press the Setup button.
– To select the opening and closing speed value, use the DRET-S / DRET-O buttons.
– To store the defined opening and closing speed, press the Setup button.

If no action is performed on the HMI for 30 seconds, the actual door position is not stored.
LED SETUP = off.

► To disable the inspection door, press the INSP button.
LED INSP = off.

9.4 Configuring of STM

MEGADYNE PVXX-2.5S-XXXX-XX XXXXXXXXXDO NOT CRIMP DO NOT LUBRICATE 4-1234MT C4

XXXXXXXXXDO
1 2 3

[0000033688]

1 Monday ... Sunday [1 ... 7]
2 Week [01 ... 52]
3 Year [04 ... 99]

If the STM manufacturing date is not entered:

– The elevator status = 97.
– The elevator can not commissioned to the customer.
– Car calls are not served.
– Floor calls are not served.

During the setup procedure, you are prompted to enter the manufacturing date of the traction media.

The manufacturing date is printed on the backside of the traction media.

► CF04 PA2: Check the current controller time.
► CF04 PA5: Check the current controller date.
► In CF28 PA4: Set the value = DWWYY — STM manufacturing date.

Set the manufacturing date to the oldest installed STM [10100 ... 75399, dwwyy].

STM lettering:

MEGADYNE STM-PV30–1.73S-PU-42 X**DWWYY**1XXD0

DWWYY = STM manufacturing date:

DWWYY	STM manufacturing date
D	Day of week [1 ... 7]
WW	Week [01 ... 53]
YY	Year [00 ... 99].

► Push the reset button.

 Copyright © 2015 INVENTIO AG

9.4.1 Reconfiguring of STM

If the STM manufacturing date is not entered:

– The elevator status = 97.
– The elevator can not commissioned to the customer.
– Car calls are not served.
– Floor calls are not served.

► CF04 PA2: Check the current controller time.
► CF04 PA5: Check the current controller date.
► To enable the STM configuration, in command 190, set in the value = 1.

The function will be canceled after 300 seconds.

► CF28 PA4: Set the value = DWWYY — STM manufacturing date.

Set the manufacturing date to the oldest installed STM [10100 ... 75399, dwwyy].

STM lettering:

MEGADYNE STM-PV30–1.73S-PU-42 X**DWWYY**1XXD0

DWWYY	STM manufacturing date
D	Day of week [1 ... 7]
WW	Week [01 ... 53]
YY	Year [00 ... 99].

► To reset the bending counter, in CF28 PA9, set the value in = 0.
► Push the reset button.

9.5 Checks before learning travel

► Check that:
– All landing doors are installed.
– All landing door contacts are installed and connected.
– All hoistway information flags are installed and correctly adjusted.
– All hoistway information magnets are installed and correctly adjusted.
– The KNE curve is installed and correctly adjusted.
– All user interfaces on the landing doors are installed and wired.
– The car door light barrier or photocell is installed and wired.
– The counterweight must be filled according to the instructions.
– The complete car decoration is installed.
– The car balancing./ counterweight balancing is correct.
– The embedded telemonitoring and alarm ETMA is installed.

► If TSD21 with reduced headroom and reduced pit:

- Do not bridge the bottom floor landing KNET contact.
- Check that all landing doors have a KNET supervision..

► If TSD21 with reduced pit:
- Check that all landing doors less than 2.5 m from the pit floor, have a KNET supervision.
- All landing doors more than 2.5 m from the pit floor, bridge the KNET contact.

► If TSD21 with reduced headroom:
- Check that all landing doors above the bottom landing door, have a KNET supervision.
- Bottom landing doors, bridge the KNET contact.

► Pit: Check the installation of the safety circuit:
- JHSG — pit stop switch.
- KSSBV — contact slack rope speed governor.
- KLSG — contact ladder pit.
- KP — buffer contact.
- KPG — counterweight buffer contact.

► ETMA: Check the complete wiring.

The telephone line can be connected on a later date, before handing over the elevator to the customer.

 Copyright © 2015 INVENTIO AG

10 Performing of learning travel

NOTICE

Collision of car with hoistway material

A collision causes material damage.

Always check the traveling car has no collision points with the hoistway material before starting an installation travel when **additional** material has been installed in the hoistway or on the car body.

- ► Check that:
  - – All mechanical components are installed.
  - – All electrical components are installed.
  - – All previous steps are correctly fulfilled.
  - – The car door drive is commissioned.
  - – The STM are commissioned.
  - – The complete car is installed.
  - – The complete car decoration is installed.
  - – The counterweight is filled according to the instructions.
  - – The car is empty.

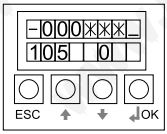

1 105 = 0

2 RESET

3 116 = 1

Disabling of the installation travel and enabling of the learning travel [0000030081]

- ► To deactivate the installation travel, in command 105, set the value = 0.
- ► Press the reset button.
- ► Inspection control panel REC: Switch:
  - – The stop button = released.
  - – The inspection mode switch = normal.
- ► Check that all car doors and landing doors are closed.
- ► Recall control panel ESE: Switch:
  - – The stop button = released.
  - – The recall mode switch = normal.

- ► If TSD21 with Sematic doors: It may be necessary to press DRH-U on the connector BESE (SMIC/SMICFC.ESE).
- ► If CO BIC 5 and TSD21 and on the SEM the LED LZS = on:
  - – SEM: Press the reset button DRZS on the SEM PCBA.
- ► If the system does not start the learning travel after a few seconds automatically, activate the learning travel manually:
  - – To activate the learning travel, set the value in command 116 = 1.
  - – Press the OK button.
  - – The elevator will perform a learning travel:

The car moves to the bottom magnet KSE-D.
The car moves to the lowest PHS flag.
The car moves up to the top magnet KSE-U, decelerates and stops at the top PHS flag.
On the top floor the system opens the brake and does a “pre-torque calibration”. If software ≥ V9.7: The door is unlocked for a short moment and then locked again.
The car moves down to the bottom magnet KSE-D, decelerates and stops at the lowest PHS flag.
On the bottom floor the system opens the brake and does a “pre-torque calibration”.

  - – If the car performs an overtravel beyond the top floor, move the top door flag downwards as required.
  - – Inspection travel JREC has priority over recall travel JRH.
    Inspection travel is possible even if JRH is switch = recall mode.

 Copyright © 2015 INVENTIO AG

11 Mandatory configurations after learning travel

Pre-conditions

The following components were commissioned previously to the learning travel:

– Door drive commissioned
– Suspension traction media are commissioned

After the learning travel perform the mandatory configurations.

Configurations	Parameter
Car load cell calibration	
– GQ definition (= rated load)	CF08 PA1
– Digisens definition	CF08 PA8
– 0 kg recalibration (= zero-load calibration, if, for example, the learning was done with non-empty car)	CF98
– Calibration with reference load	CF99
– Backup of calibration	CF96
COP	CF15 PA1
Floor designation	CF01
LOP Manual LOP counting if necessary	CF00 LE = – – CF00 LE = 00
Only if blind floor flags are installed. – LIFD long interfloor distance configuration	CF26
Only if independent door operation.	CF30
Only if car dumping device CDD is installed.	CF08 PA19
Only if machine room available Default = 0 for MRL elevator – Distinguishes between MRL [0] elevator and MR [1] elevator. If set to 1 for elevator with MR, KFM does not open the door on the top floor	CF02 PA8
Only if penthouse Option: (LDU installed on the 2nd top most floor) – Configure the floor where the LDU is installed	CF02 PA7

All the other configurations are depending on the system options

11.1 Configuring of load measuring

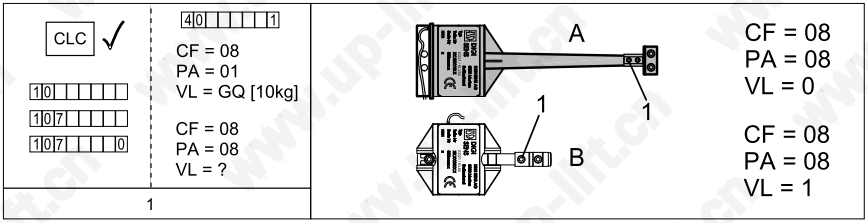

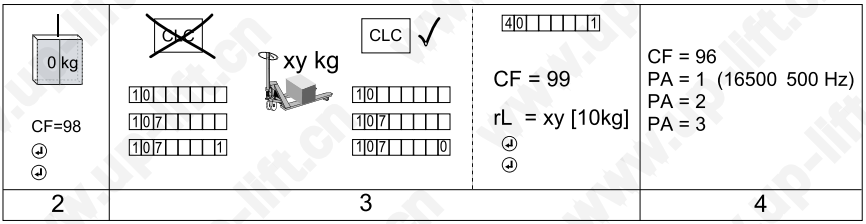

[0000030188]

– An error displayed during the car load cell configuration belongs to error group 11xx.
  Example: Er 9 = error 1109
– If an error occurs during the calibration of the load measuring:
  – CF08 PA8: Check the Digisens type.
  – Repeat the learning travel with activated load measuring — command 107 = 0.

The configuration of the load measuring is to be done in 4 steps.

– Step 1 — Configuring of the system relevant parameters.
– Step 2 — Configuring of 0 kg.
– Step 3 — Configuring of reference load (75 % of GQ).
– Step 4 — Backup of calibrated data.

► Check that:
  – The counterweight is completely filled.
  – The car is completely installed, including:

Car decoration

 Copyright © 2015 INVENTIO AG

Balustrade
...

- The guide rail adjustment is completed.
- The sliding guides shoes are properly adjusted within the correct tolerances and they are according to the layout drawing and installation method.
- The Digisens is free of pre-stressing. Loose the adjustment screws (1) and tighten them again before starting the calibration.
- If red Digisens KL250: The sensor wire of the red Digisens must not touch the red plastic tube.
- If Schindler 3100: The white Digisens must be mounted with 45° on the pulley.
- The learning travel with activated Digisens is performed.
- 75 % of rated load is available.

► If car dumping device CDD:
- Enter the car roof.
- With the door operation button, close the car door.
- Wait until the CDD is open.
- Switch JH = off.
- CDD: Plug out the power supply.
- Close the OKR/CCU.
- Switch JH = on.
- Go on with the configuration of the load measuring.

Step 1 — Configuring of the system relevant parameters

► To enable the load measuring, set the value in command 107 = 0.

► CF08 PA1: Set the value = rated load GQ [kg * 0.1].

GQ = 675 kg → value = 067.

► CF08 PA8: Set the value = car load sensor type A or B.

Value	Type	Description
0	A	Digisens KL250 (red)
1	B	Digisens KL66 (white)

Step 2 — Configuring of 0 kg

► Check that the car is empty.

► CF98: Press OK.
The HMI indicates the actual load in the car. This value can be wrong, because the load measuring is not calibrated.

► To start the calibration, press OK.
  – After the 10 seconds countdown, 5 measurements will be executed.
  – The HMI indicates [Ld 0] = 0 [kg].
► If Digisens KL66:
  – CF96 PA1: Check the 0 kg frequency = 16000 [Hz] ... 17000 [Hz].
  – If the 0 kg frequency ≠ 16000 [Hz] ... 17000 [Hz]:

Check the mechanical installation of the Digisens.
Loose and tight the screws.
Check the right 45° positioning on the Schindler 3100 pulley.
Repeat the 0 kg calibration.

Step 3 — Configuring of reference load (75 % of GQ)

► To disable the load measuring, set the value in command 107 = 1.

The deactivation of the car load measuring allows travels with non configured car load cell.

► Load the reference load into the car.

Reference load less than 75% of rated load GQ.

► Place the car at the configuration floor.
► To enable the load measuring, set the value in command 107 = 0.
► Select CF99.
  – Press OK.

The HMI ask to enter the reference load.

► CF99: Set the value = reference load which is actual in the car [kg * 0,1].
► Press OK.
The HMI displays the actual measured load. Due to the system is not yet commissioned, the value displayed may be wrong.
► Press OK.
  – A 10 seconds countdown starts.
  – The HMI displays the actual load in the car, after the countdown is finished.

Step 4 — Reading of the values of the car load cell measuring CLC

► CF96 PA1: Read the value.
► CF96 PA2: Read the value.
► CF96 PA3 Read the value.
► Write the values on:
  – The cover page of the schematics or
  – With a waterproof pen inside of the controller cabinet.

 Copyright © 2015 INVENTIO AG

This values are needed for the maintenance.

► If car dumping device CDD:
  – Switch JH = off.
  – Enter the car roof.
  – Plug in the power supply of CDD.
  – Close the OKR/CCU.
  – Switch JH = on.

11.1.1 Reconfiguring of load measuring

Re-configuration of CLC without weights

This procedure can be used, if the microprocessor PCBA (SCIC or SCPU) has to be exchanged.

Preparation

To be able to re-configure the CLC at a later date the CLC values of the initial calibration have to written down. With the old microprocessor PCBA inserted read out the values:

– Enter configuration mode 96.
– Read out and write down the actual date (for example an the cover page of the schematic wiring diagram or inside of the LDU cover with a waterproof pen): Example 1450 = 14500 [Hz].

► Check that the load measuring values are available.

CF	PA	Description	Actual value
96	**1**	0 kg carload frequency	
96	**2**	Reference carload frequency	
96	**3**	Reference car load weight	

With the new SCIC or SCPU PCBA inserted configure the system with the old values.

► Command 107: Check the load measuring is active and the value = 0.
► CF08 PA1: Set the value = rated load GQ [kg * 0.1].
► CF08 PA8: Set the value = car load sensor type.

Value	Description
0	Digisens KL250 (red)
1	Digisens KL66 (white)

► Choose CF97 and enter the values which have been read out with CF96 before.

CF	PA	Description
97	**1**	0 kg carload frequency [1 = 10 Hz]
97	**2**	Reference carload frequency [1 = 10 Hz]
97	**3**	Reference car load weight [1 = 10 kg] (example: 50 = 500 kg)

► To configure the 0 kg calibration:
- Check that the car is empty.
- CF98: Press OK.
  The HMI indicates the actual load in the car.

  This value can be wrong, because the load measuring is not calibrated.
- To start the calibration, press OK.

After the 10 seconds countdown, 5 measurements will be executed.

The HMI indicates [Ld 0] = 0 kg.

11.2 Configuring of car operation panel FIGS or COP5

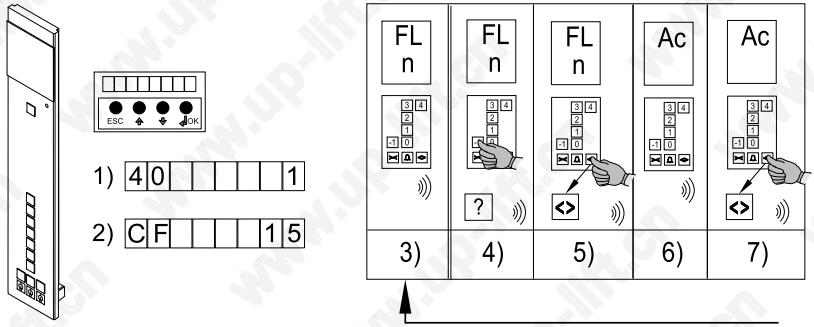

[0000030083]

Pos.	Description
1) ... 7)	Configuration steps

► CF15 PA1: Press OK.

The keypad configuration starts with the bottom floor.
- HMI = [CF 15 _ _ _]
- The COP= beep once
- COP position indicator = FL, n

 Copyright © 2015 INVENTIO AG

n = floor to configure.

► COP: Press the to assigned car call button.

► To confirm the selection, press the DT-O.

The position indicator = Ac, car call button is configured

► To continue with the next floor, press the DT-O.

► Repeat the keypad configuration (3 ... 7) with each car call button for each floor.

► COP: If the button inscription not corresponding with the indicated floor: Check the floor designation CF01.

11.3 Configuring of floor designations

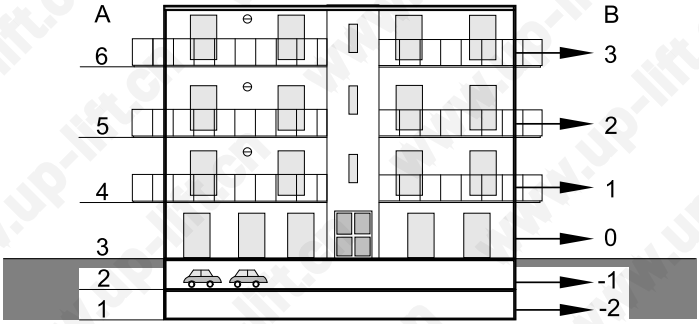

[0000030084]

A Floor level

B Floor designation

Example:

The first floor level has to be designated as –2 (CF01 PA1 VL = –2).

► Select CF01 — floor designation configuration.

► Select PA1 — floor level to be designated.

In our example: Floor level 1.

► To confirm, press OK.

The actual designation is displayed as VL.

► Change the floor designation required.

In our example: VL = –2.

► To confirm, press OK.

The next floor level is displayed.

► Repeat the previous steps for all floor levels.

The floor designations above the lowest floor are changed ascending automatically.

11.4 Configuring of LOP

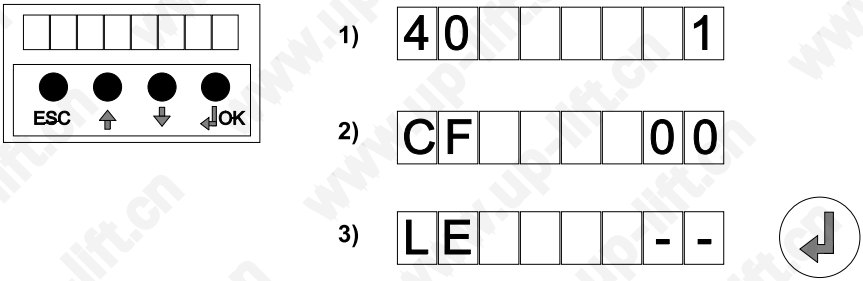

[0000030086]

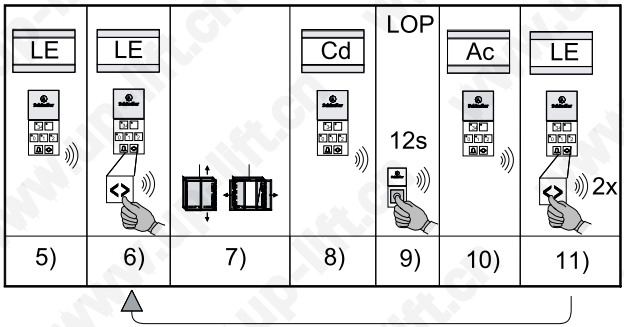

[0000030087]

- Configuration through COP FIGS or COP5.
- Independently of the connection of the LOPs the configuration procedure remains the same.
- Each LOP needs to be configured with an unique address.
- In case of 2 entrance sides: LOP configuration has to be done two times (once per each entrance side).
- In case of Duplex system, see section Duplex general information.

The LOP configuration is performed in following two steps:

- LOP addressing.
- LOP counting.

Step 1: LOP addressing

► Enter the configuration mode 40.

 Copyright © 2015 INVENTIO AG

► Select CF00 and press OK.

HMI = [LE — —].

► To enter the LOP configuration, press OK.

HMI = [_ _ _ _ _ _].

COP = beeps once.

The system is ready to start the addressing of the LOP on the top floor.

– The acknowledge lamp of the top floor is on.
– The COP position indicator displays LE.

► COP: Press DT-O.

FIGS answers with a beep.

The car moves to the selected floor and opens the door.

– The COP position indicator displays the actual floor.

► Wait until the door has opened completely.

The COP beeps once. This indicates that the 12 second countdown has started.

– The acknowledge lamp of the actual floor blinks to indicate the 12 second countdown.
– The position indicator displays Cd.

► During the 12 second countdown, press the button (up button in case of KS) on the LOP until you hear long beep from COP.

– Release the button on the LOP.
– If the configuration was successful, continue with the next step.
A double beep from the COP indicates a configuration failure. The COP position indicator displays Er. Press the DT-O twice to confirm the error and to start the countdown again.

► Wait until the COP answers with a short beep.

This indicates that the countdown has ended.

– The acknowledge lamp of the actual floor is on again.
– The COP position indicator displays Ac (or Br if a JBF has been detected).

► Press DT-O to confirm the correct configuration of the just configured LOP.
The COP answers with 2 short beeps.

– The acknowledge lamp of the next lower floor is on.
– The COP position indicator displays LE.

► Repeat the LOP configuration steps 6 ... 11.

Step 2: LOP counting

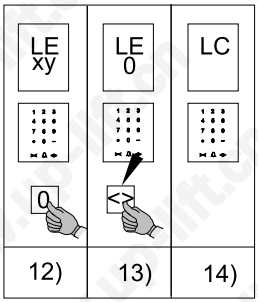

COP5, COP5-10, COP5B-10

[0000030088]

► When LE is displayed on the COP, choose floor level 0.

► Press DT-O to confirm until there is a beep.

HMI shows CF00 again.

► Wait until the LOP counting has finished.

LOP counting is indicated by Lc on COP and HMI.

If the LOP counting does not start automatically it has to initialed manually. See chapter “Manual counting of LOP”.

11.5 Manual counting of LOP

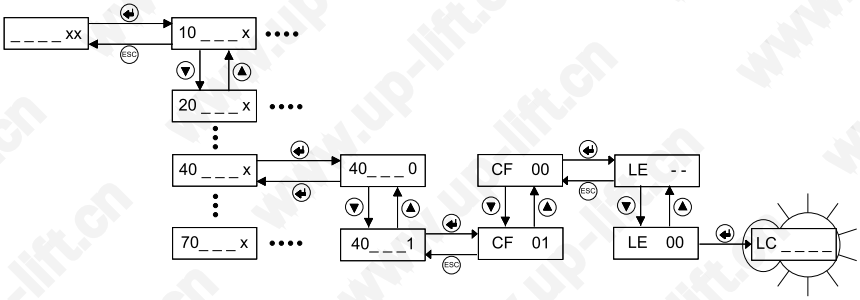

[0000030089]

Manual LOP counting is required:

– If the LOP counting does not start automatically after:

Each LOP addressing
Configuration changes on a BIO bus node.

– After the replacement of the microprocessor PCBA SCPU.

► Select CF00

 Copyright © 2015 INVENTIO AG

► Press OK
► Select LE = 00
► Press OK
HMI = blinking [LC _ _ _ _]
► Wait until the LOP counting has been finished.

This can take several minutes.
► Press ESC and leave the configuration mode.

11.6 Configuring of long interfloor distance LIFD

The long interfloor distance LIFD kit is used to minimize the problems due to slip in systems with big distances between the floors. To reduce this problem an additional PHS flag is installed between the floors. (“Blind” floor.). During the learning travel the additional flag is recognized as the flags from the normal floors. (Although there is no landing door available.) Therefore this floor has to be defined as “blind” floor after the learning travel.

► Check that:
- The maximal distance between two floors is 11 meters.To guarantee the evacuation.
- The chip card option long interfloor distance LIFD is enabled.
- The additional flag in the blind floor is installed.
- The hoistway information sensor PHS_B is installed.
- The learning travel is performed.

► To set the floor level without a landing door and mark this floor as blind floor, set the value in CF26 PAn = 1.

n = floor without the landing door.

11.7 Configuring of selective doors (ZZ2, ZZ3)

► Check that:
- If ZZ2 = selective doors — independently door opening: The chip card option is enabled.
- If ZZ3 = interlock doors — to avoid both doors are open at the same time: The chip card option is enabled.
- If duplex installation: The configuration is done individually for each elevator before connecting the group.
- No parallel card readers ZBC2.
- No triplex installation.
- No quadruplex installation.
- No asymmetric duplex.
- No Schindler access system SAS — LiftKey.
- If software version V9.7: Car operation panel = COP5.
- If software version V9.8: Planned to support 2 COPH.
- No dual brand COP — MX basic.

Check of the COP assignment to the door side

► Enter a car call on the first COP.
The corresponding car door opens.

► Enter a car call on the second COP.
The corresponding car door opens.

Configure the COP assignment to the door side

Values for the door side configuration:

Value	Door side definition
0	Undefined door side
1	Door side 1
2	Door side 2
3	Both door sides

► CF30 PA21: Enter the value which COP#1 door side belongs to.

► CF30 PA22: Enter the value which COP#2 door side belongs to.

The numbering of the COP is defined by the physical position:

SDIC → COP#2 → COP#1.

LOP configuration

Values for the door side configuration:

 Copyright © 2015 INVENTIO AG

Value	Door side definition
0	Undefined door side
1	Door side 1
2	Door side 2
3	Both door sides

- ► Enable the LOP configuration
  - – During the LOP configuration the 1. door side will be the first to configure.
  - – The 2. door side will be offered directly afterwards.
- ► Repeat the LOP configuration for each floor and each door side.
- ► CF30 PA1: Check the value for the door side of the fire recall floor.
- ► CF30 PA2: Check the value for the door side of the collective policy main floor.

  If software version V9.72 or higher: The value is set = 3 automatically when configuring CF02 PA2.
- ► CF30 PA6: Check the value for the door side of the fire alternative recall floor.
- ► CF30 PA7: Check the value for the door side of the configuration floor.

If restricted access:

- ► CF41 L0 ... Ln (restricted access function L = floor level): Check the value for the door side S (1, 2).
  - – To access the CF41, use the HMI, SPECI or CADI.
  - – The door side S (1, 2) is available only for software version V9.7 or higher and in case of independent doors (ZZ2 or ZZ3 on the chip card).
  - – L = 0, affects all nodes on all floors.

CF41: Restricted access operation ZB

L	S	PA	Description
0		1	Behavior of independent travel, reservation control (JRCV). Affecting all levels and all restrictions types of CF41. Software version V9.34 or higher. 0 = JRVC can access restricted floors. (Default) 1 = JRVC can not access restricted floors.

CF41: Restricted access operation ZB

L	S	PA	Description
1 ... n	1, 2	1	ZB1: PIN code on the COP Software version V9.34 or higher. Chip card option must be enabled. Value = –999 ... 9999 0000 = No Pin code (default) A four digit PIN code for restricted access, disables the normal car call button for this floor. For a three digit code use — as the first sign. Example: —123
1 ... n	1, 2	2	ZB3: Key switch in the car. Software version V9.34 or higher. Chip card option must be enabled. Value = 0 ... 4 0 = No function (default) 1 = Key switch at COP input KEY1, ... , 4 = key switch at COP input KEY4 Corresponding to CF05 or CF55.
1 ... n	1, 2	3	GS: Visitor operation Available with software version V9.7 or higher. If software version less than V9.7 refer to CF17. Chip card option must be enabled. 0 = disabled (If no GS: default) 3 = 30s (If GS: default) Sets the duration of the visitor request signalization and the enable time for the “access granted” button. GS is restricted to simplex with PI.

 Copyright © 2015 INVENTIO AG

CF41: Restricted access operation ZB

L	S	PA	Description
1 ... n	1, 2	99	ZBC2: Floor restrictions. Used for parallel car reader only. Software version V9.38 or higher. Chip card option must be enabled. This parameter determines the type of restriction of access at this floor. – 0 = no restriction (default) – 1 = exit to floor restricted – 2 = exit from floor restricted – 3 = exit to/from floor restricted (full blocking)

If additional inputs and outputs on the BIO bus nodes (LOP, LIN, LCUX, BIOGIO):

► CF40 L0 ... Ln (BIO bus nodes configuration L = floor level): Check the value for the door side.
- To access the CF40, use the HMI, SPECI or CADI.
- The door side S (1, 2) is available only for software version V9.7 or higher and in case of independent doors (ZZ2 or ZZ3 on the chip card).
- L = 0, affects all nodes on all floors.
- L = 1 ...n, affects defined floor level only.
- Availability of the parameters depends on the connected hardware on the respected floor during the LOP configuration.

CF40: BIO bus device I/Os (LOP, LCUX, LCUM, LIN)

L	S	PA	Description
0		31	LIN output function at all levels Software version V9.38 or higher. 0 = No function (default) Value = BMK function code for the output. Available with LINV51 or newer.

CF40: BIO bus device I/Os (LOP, LCUX, LCUM, LIN)

L	S	PA	Description
0		99	BIO bus node clearing at all levels Software version V9.34 or higher. 0 = No function (default) 1 = Clear command. This parameter is used to simultaneously clear all BIO bus nodes at all levels.
1 ... n	1, 2	1 ... 4	LCUX.I/O1 ... LCUX.I/O4 function of input 1 ... input 4. Software version V9.34 or higher. 0 = No function (default) Value = BMK function code for the input. For group functions in duplex: Both LCUX must be configured equally.
1 ... n	1, 2	5 ... 8	BIOGIO.INPUT1 ... BIOGIO.INPUT4 function of input 1 ... input 4. Software version V9.34 or higher. 0 = No function (default) Value = BMK function code for the input. Available ifBIOGIO was with help of the TEACH-IN button. Not used at the moment. See also L91 ... L93.
1 ... n	1, 2	11 ... 14	LCUX.I/O1 ... LCUX.I/O4 function of output 1 ... output 4. Software version V9.34 or higher. 0 = No function (default) Value = BMK function code for the input. For group functions in duplex: Both LCUX must be configured equally.

 Copyright © 2015 INVENTIO AG

CF40: BIO bus device I/Os (LOP, LCUX, LCUM, LIN)

L	S	PA	Description
1 ... n	1, 2	15 ... 18	BIOGIO.OUTPUT1 ... BIOGIO.OUTPUT4 function of output 1 ... output 4. Software version V9.34 or higher. Not used with Schindler 3100/3300/5300 or not used in EU version. 0 = No function (default) Value = BMK function code for the input. Available ifBIOGIO was with help of the TEACH-IN button. Not used at the moment. See also L91 ... L93.
1 ... n	1, 2	21	LOP.XBIO pin 4 function of input Software version V9.34 or higher. 0 = No function (default) Value = BMK function code for the input. For software version less than V9.34, see CF60 PAn or CF61 ... CF80 PA17.
1 ... n	1, 2	31	LINV51 output Software version V9.38 or higher. 0 = No function (default) Value = BMK function code for the input. Available with LINV51 or newer
1 ... n	1, 2	99	BIO bus node clearing at this level Software version V9.34 or higher. 0 = No function (default) 1 = Clear command. This parameter is used to simultaneously clear the BIO bus nodes at this floor.

CF40: BIO bus device I/Os (LOP, LCUX, LCUM, LIN)

L	S	PA	Description
91		1 ... 4	LCUX or BIOGIO with predefined address #1, input 1 ... input 4. Software version V9.34 or higher. 0 = No function (default) Value = BMK function code for the input. Configuration switch CFG 1 = ON, CFG 2 = ON Before doing the configuration: Set the DIP switches correctly, connect the LCUX or BIOGIO to the BIO bus and initiate a LOP counting manually.
91		5 ... 8	BIOGIO with predefined address #1, input 1 ... input 4. Software version V9.34 or higher. 0 = No function (default) Value = BMK function code for the input. Configuration switch CFG 1 = ON, CFG 2 = ON Before doing the configuration: Set the DIP switches correctly, connect the BIOGIO to the BIO bus and initiate a LOP counting manually.
91		11 ... 14	LCUX or BIOGIO with predefined address #1, output 1 ... output 4. Software version V9.34 or higher. 0 = No function (default) Value = BMK function code for the output. Configuration switch CFG 1 = ON, CFG 2 = ON Before doing the configuration: Set the DIP switches correctly, connect the LCUX or BIOGIO to the BIO bus and initiate a LOP counting manually.

 Copyright © 2015 INVENTIO AG

CF40: BIO bus device I/Os (LOP, LCUX, LCUM, LIN)

L	S	PA	Description
91		15 ... 18	BIOGIO with predefined address #1, output 1 ... output 4. Software version V9.34 or higher. 0 = No function (default) Value = BMK function code for the output. Configuration switch CFG 1 = ON, CFG 2 = ON Before doing the configuration: Set the DIP switches correctly, connect the BIOGIO to the BIO bus and initiate a LOP counting manually.
92		1 ... 18	LCUX or BIOGIO with predefined address #2. Software version V9.34 or higher. 0 = No function (default) Value = BMK function code for the output. Configuration switch CFG0 = OFF, CFG1 = ON. Before doing the configuration: Set the DIP switches correctly, connect the BIOGIO to the BIO bus and initiate a LOP counting manually.
93		1 ... 18	LCUX or BIOGIO with predefined address #3. Software version V9.34 or higher. 0 = No function (default) Value = BMK function code for the output. Configuration switch CFG0 = ON, CFG1 = OFF. Before doing the configuration: Set the DIP switches correctly, connect the BIOGIO to the BIO bus and initiate a LOP counting manually.

11.8 Configuring of car dumping device

The car damping device CDD is installed to minimize the effects of the traction media's stretching to the car.

This chapter is only applicable for Schindler 3600.

► Check the value of CF08 PA19 is related to the rated load GQ.

GQ	PA19
675 [kg]	104
800 [kg]	104
1000 [kg]	104

► If the safety circuit is keep open via the CDD by starting the travel: Slow down the door movement speed a little bit instead of adjusting CF03 PA8 — debouncing time.

The load measuring must be calibrated when the CDD is not pinching the rails.

 Copyright © 2015 INVENTIO AG

12 Configuring of LOP functions

12.1 Configuring of FIGS — LOP, LIP, LCUX

There are basically 2 options of connections:

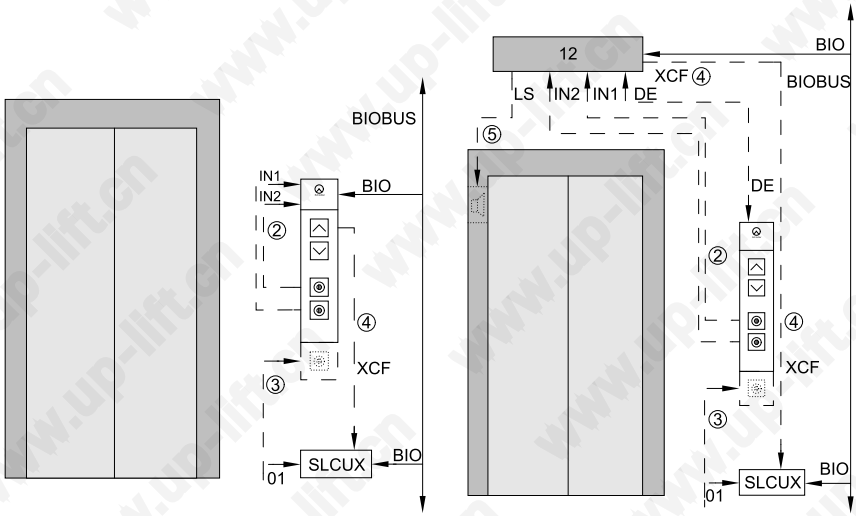

[0000030174]

Connection:

- LOP - Simplex
  - LOP is connected directly to the Biobus.
    2 I/Os on landing can be connected to the LOP.
  - SLCUX optional if more than 2 I/O needed on landing.
    SLCUX is connected directly to the Biobus.
    XCF connection between SLCUX and LOP.
- LOP and LIP - Simplex
  - LIP is connected directly to the Biobus.
    LOP and LIP connected through DE connection.
    2 I/Os can be connected to the LIP.
  - SLCUX optional if more than 2 I/O needed on landing.
    SLCUX is connected directly to the Biobus.

XCF connection between SLCUX and LIP.

Configuration

– Each LOP and LIP needs to be configured with an unique address.
– LOP and LIP commissioning is done during LOP configuration.

▶ To configure the LOP and LIP at the floor level:
  – To configure an input at LOP and LIP:

    CF40, L = 1 ... n, S = 1, 2, PA = 21 ... 28, VL = BMK.
  – To configure an output at LOP and LIP:

    CF40, L = 1 ... n, S = 1, 2, PA = 31 ... 38, VL = BMK.

▶ To configure an output on a LIP to all levels, set:

  CF40, L = 0, PA = 31 ... 38, VL = BMK.

Examples for VL

– VL = 0 → no function [0 ... 999]
– VL = BMK: See chapter BMK function codes (VL = 213: Floor light control).

The configuration of the inputs and outputs of the LCUX has to be done afterwards. It is described in the chapter LCUX, additional inputs and outputs.

 Copyright © 2015 INVENTIO AG

12.2 Configuring of FIGL — LOP, LIN, LCUX

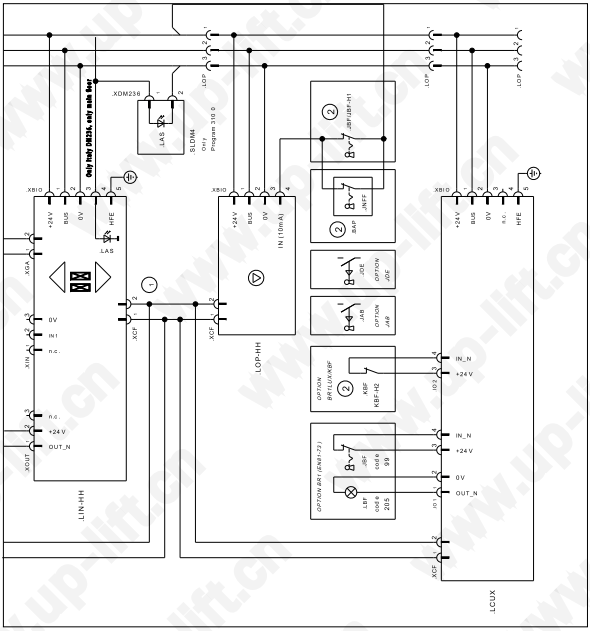

[0000030085]

– Each LOP and LIN needs to be configured with an unique address.
– This is done during LOP configuration.
– The configuration of the inputs and outputs of the LCUX has to be done afterwards. It is described in chapter “Additional inputs and outputs “LCUX”.

LIN and LCUX configuration procedure A

► Check that the LIN and/or the LCUX is connected to the LOP with help of the synchronization cable (XCF).

On a floor with both LIN and LCUX it may be necessary to do the configuration twice. One time with the LIN connected and a second time with the LCUX connected.

► Perform the LOP configuration including the LOP counting for this floor as described in the chapter “Configuring of LOP”

LIN 52 configuration procedure B

► Enter the LOP configuration (CF00 LE = –) and choose the floor where the LIN is installed.

► During the 12 second countdown place the magnet in the middle of the LIN on the surface.

It is recommended to configure during the same countdown both the LOP (with the button) and the LIN (with the magnet).

It is possible to extend the countdown time with help of CF07 PA10. The correct addressing will be confirmed by a beep of the COP.

► After all the LIN are configured the LOP counting has to be performed.

LCUX2.Q configuration procedure B

► Enter the LOP configuration (CF00 LE = –) and choose the floor where the LCUX is installed.

► During the 12 second countdown close one of the inputs IO1 ... IO4, pin 3 - 4 (for example with the (key) switch connected to the LCUX).

It is recommended to configure during the same countdown both the LOP (with the button) and the LCUX (with the input).

It is possible to extend the countdown time with help of CF07 PA10. The correct addressing will be confirmed by a beep of the COP.

► After all the LCUX are configured: The LOP counting has to be performed.

 Copyright © 2015 INVENTIO AG

12.3 Configuring of fire service switch JBF (BR)

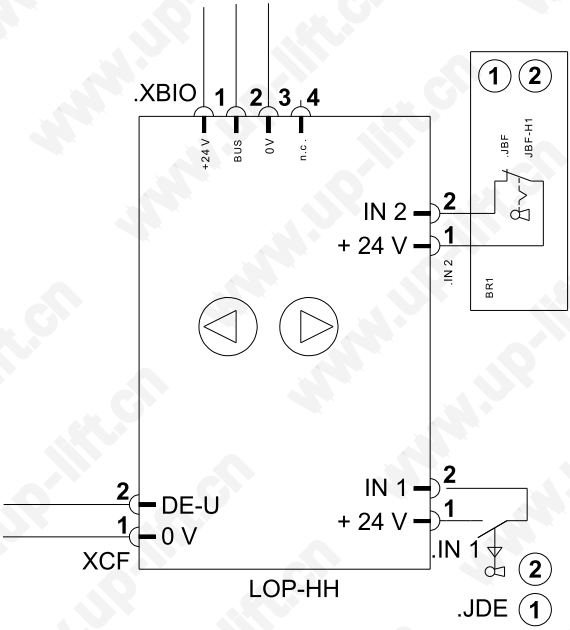

[0000030090]

- ► Check that:
  - – The chip card option “Fire Service” BRx is enabled.
  - – A correct recognition of the JBF is indicated by “Br” (instead of “Ac”) during the LOP addressing.
  - – Systems without visual indicators (Dual Brand) the correct recognition is indicated by the missing acknowledge beep signal.
  - – JBF has to be connected to the LOP according to schematics.
  - – JBF is in normal position (contact is closed). Normally closed (NC) key switch has to be used.
- ► To perform the LOP configuration on the floor where the JBF is connected, select CF00 LE = — —.

  JBF must be in normal (closed) position.
- ► Make sure the LOP counting has been completed.

  During the LOP counting the JBF is detected and configured by the system automatically.

12.4 Configuring of floor call key switch JDE and JAB

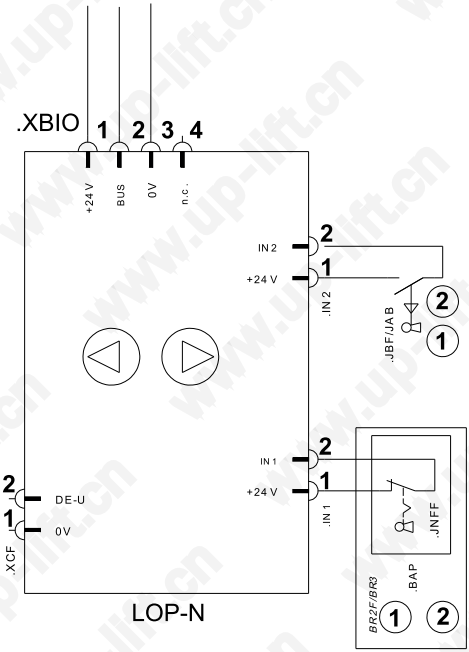

[0000030091]

- ► Check that the chip card option is enabled.
  - – JDE: No option is necessary.
  - – JAB: “Out of Service” JAB key Switch.
- ► Check that normally open (NO) key switches are used for:
  - – JDE
  - – JAB.
- ► To perform the LOP configuration on the floor where the JDE or JAB is connected, select CF00 LE = — —.
- ► Check that the LOP counting has been completed.

  LC on the COP and HMI.
- ► CF40 Ln S1/S2 PA21: Configure the function of the key switch VL = BMK code.

  n = floor level

  S1 = door side 1

  S2 = door side 2

  BMK code:

 Copyright © 2015 INVENTIO AG

– VL = 19 = JDE / JDE-U
– VL = 20 = JDE-D
– VL = 49 = JAB.

JAB parking floor: The floor to which the elevator returns while JAB is active can be configured with CF02 PA3 (independent on the floor where the JAB is mounted).

12.5 Configuring of LOP landing functions JNFF, JBF, JAB

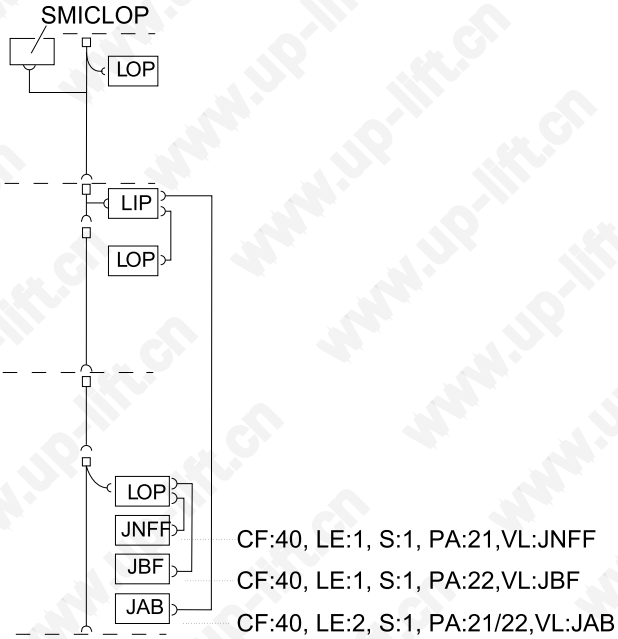

JAB on main floor [0000030092]

The configuration of landing peripheral can be carried with and without the LCUX.

In case that the following options JNFF, JBF and JAB must be installed on the main floor, they can be installed and commissioned without the LCUX.

With LCUX

► Install two of the floor related options on the main floor: LIP or LOP (if no LIP available).

Use the supplied cables.

► Install the third option, which is not floor related on the main floor, but it should be connected to the LCUX.

Without LCUX

► Install two of the floor related options on the main floor (1): LIP / LOP (if no LIP available).

Use the supplied cables.

► Install the third option, which is not floor related on the main floor, but it should be connected to the immediate neighboring floor (2).

The option will be connected to the LIP / LOP (if not LIP available in that floor).

Use the supplied longer cable (3).

► Configuration of JAB, JBF and JNFF on the main floor:
- CF40 LE1 S1 PA:21 value = JNFF.
- CF40 LE1 S1 PA:22 value = JBF.

► Configure the third option not related on main floor JAB:
- CF40 LE2 S1 PA21/22 value = JAB.

12.6 Configuring of additional inputs and outputs LCUX

There are basically 2 potential connections between FIGS and LCUX:

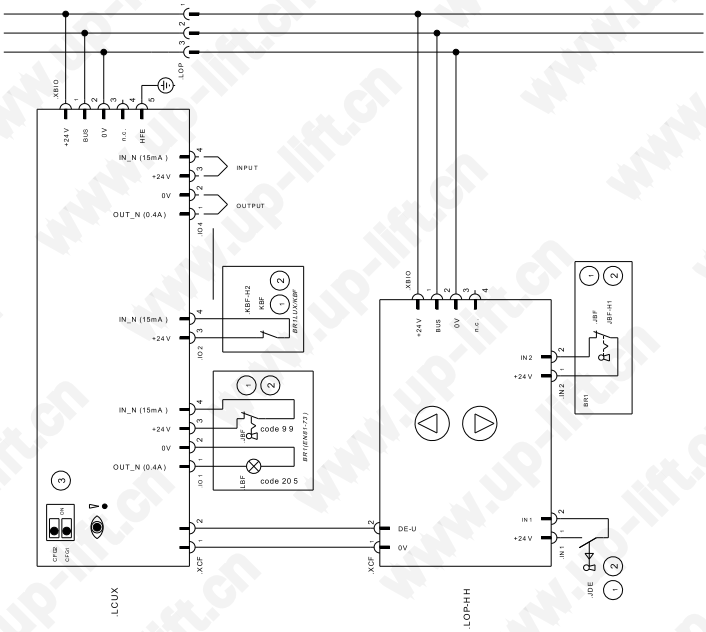

A: LCUX connected to the LOP - No LIP available [0000030093]

 Copyright © 2015 INVENTIO AG

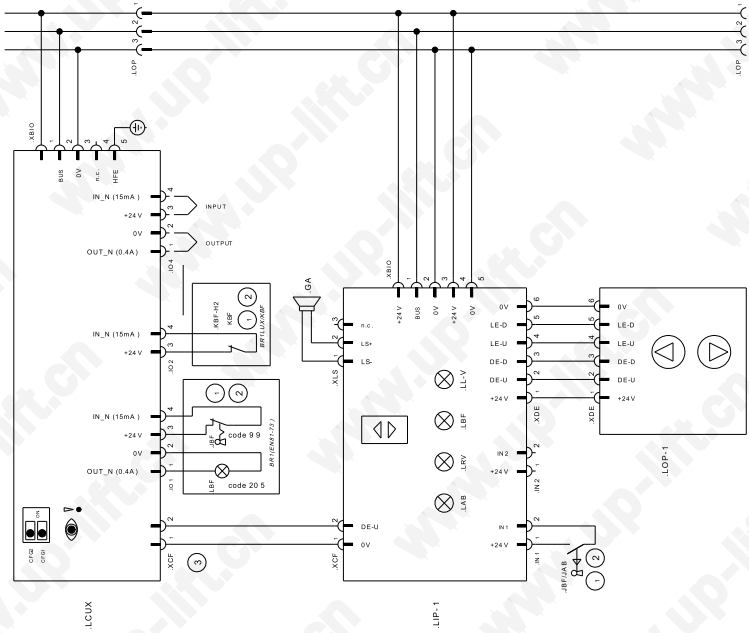

B: LCUX connected to the LIP - LOP connected to the LIP [0000030094]

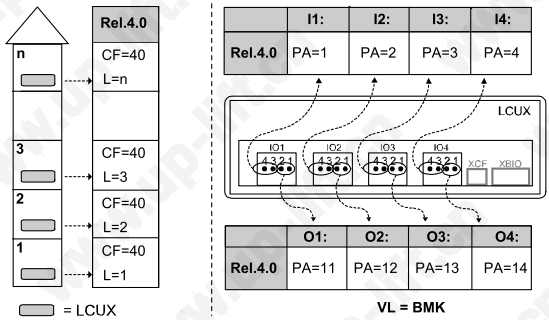

Example: JBF and LEFEH on floor level 3:

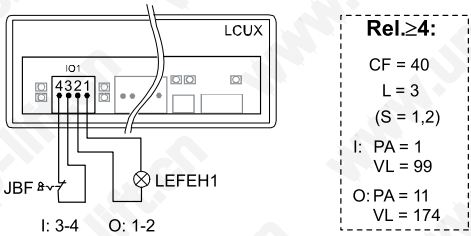

LCUX [0000030136]

– For some functions a chip card option is necessary.
– For group functions in duplex systems: Both LCUX must be configured equally.
– LCUX with pre-defined address which has no XCF connection to a LOP (for example used for hoistway temperature supervision):

Address definition has to be done with DIP switches on LCUX.
Software version V9.34 or higher: Configuration has to be done with CF40, L = 91, L = 92, L = 93.

► Check that:
  – Inputs and outputs are connected according the schematics.
  – LOP configuration and LOP counting have been performed with LCUX connected according the schematics (BIO bus and XCF).

► Definition of floor level where the LCUX is connected: InCF40 Ln S1/S2 PAx, set the value = BMK function code.

  n = floor level

  S1 = door side 1

  S2 = door side 2

  PAx:

 Copyright © 2015 INVENTIO AG

– PA1 ... PA4 = input 1 ... input 4
– PA11 ... PA14 = output 1 ... output 4.

BMK:

VL = BMK function code of inputs and outputs.

13 Configuring of COP functions

13.1 Configuring of PIN code protected car call ZB1

- The chip card option PIN code ZB1 must be enabled.
- PIN code can be 3 or 4 digits long.
- 3-digit codes must start with a “-” during configuration. In operation, only the three digits will be necessary.
- To erase the code: Enter value = 0000.
- It may be necessary to change the time to enter the PIN code. This can be done in CF06 PA3.
- In case of independent door operation it is not possible to configure on a certain floor the same PIN code on side S1 as on side S2.

► Check that there is no GS visitor operation on the same floor.

► In CF41 Ln S1/S2 PA1, set the value = PIN code.

- Ln = floor level with restricted access
- S1 = door side 1 — for independent door ZZ2 / ZZ3
- S2 = door side 2 — for independent door ZZ2 / ZZ3.

13.2 Configuring of car call key switch JDC and floor access restrictions ZB3

ZB3 is an option on the chip card that restricts access to floors with a key switch. The floors must be configured.

► Check the wiring: SDIC/SCMI2x → COP2 → COP1.

► If COP5x COP: Check the used input connector on SCOP — XKEY1 ... XKEY4.

► If FIGS COP: Check the used input connector on CANCP — IN1 ... IN4.

Car call key switch JDC

► CF05 PAx: Set the value = 002 — JDC BMK function code.

Default = 0 = no function

PAx	COP5x input	FIGS input
PA01	XKEY1	IN1
PA02	XKEY2	IN2
PA03	XKEY3	IN3
PA04	XKEY4	IN4

Floor access restriction ZB3

► CF41 Ln S1/S2 PA2: Set the value = 01 ... 04.

 Copyright © 2015 INVENTIO AG

Default = 0 = no function

Variable	Description
Ln	Floor level
S1/S2	Door side 1/2
Value	Input 01 ... 04

Input where the key switch is connected to:

COP5 input	FIGS input	Input
XKEY1	IN1	01
XKEY2	IN2	02
XKEY3	IN3	03
XKEY4	IN4	04

13.3 Configuring of reservation key switch JRVC in car

JRVC is an option on the chip card that allows to reserve the car with a key switch.

► Check the wiring: SDIC/SCMI2x → COP2 → COP1.

► If COP5x COP: Check the used input connector on SCOP — XKEY1 ... XKEY4.

► If FIGS COP: Check the used input connector on CANCP — IN1 ... IN4.

Switch definition JRVC

► CF05 PAx: Set the value = 059 — JRVC BMK function code

Default = 0 = no function

PAx	COP5x input	FIGS input
PA01	XKEY1	IN1
PA02	XKEY2	IN2
PA03	XKEY3	IN3
PA04	XKEY4	IN4

Service JRVC with Access to the Restricted Floors

This step define whether JRCV reservation control, can access at the restricted floors or not.

► CF41 L0 PA1: Set the value = 00 / 01 JRVC behavior.

L = 0 → JRVC function affect at all floor levels.

Value	Description
00	JRVC can access the restricted floors
01	JRVC can not access the restricted floor

13.4 Visitor control GS

13.4.1 Visitor control GS

Protection of penthouse floor n

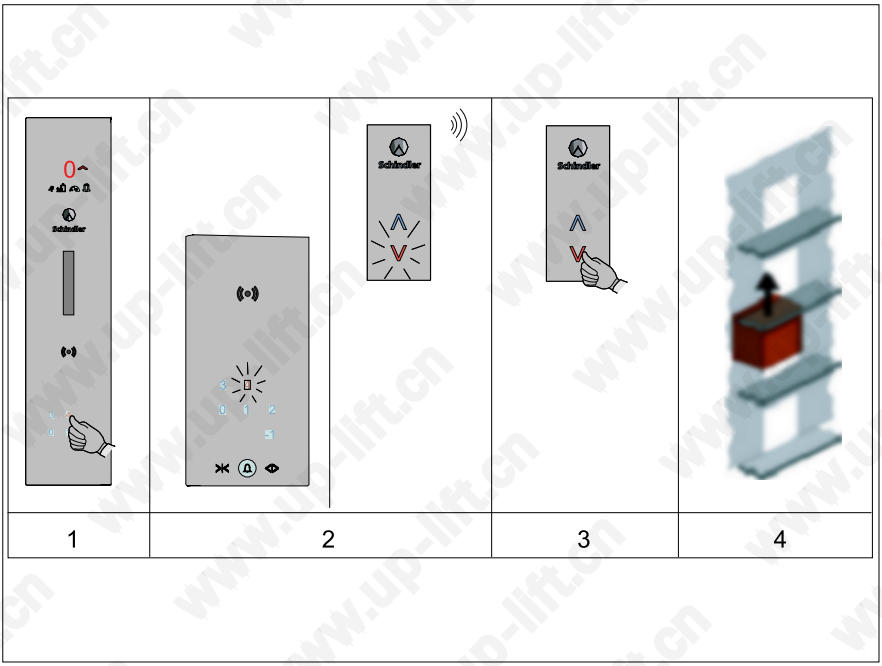

Functional sequence visitor control GS [0000030115]

1 The visitor gives a car call to the protected floor.

2 The car call is acknowledged but the elevator does not yet travel. On the protected floor there is an optical signal (on the LOP) and an acoustical signal (gong connected to LIN/LIP)

3 On the protected floor the owner of the apartment has to approve the car call within 30 seconds by pressing the release button.

4 Only after approval the car travels to the protected floor.

 Copyright © 2015 INVENTIO AG

Function description

- The visitor gives a car call to the protected floor.
- The car call is acknowledged but the elevator does not yet travel. On the protected floor there is an optical signal (on the LOP) and an acoustical signal (gong connected to the LIN/LIP).
- On the protected floor the owner of the apartment has to approve the car call within 30 seconds by pressing the release button.
- Only after approval the car travels to the protected floor.

13.4.2 Configuring of visitor control GS

To enhance the security for the customer an intercom connection to the car can be installed. (Minimum load function is not available with Schindler 3100 / Schindler 3300 / Schindler 5300.)

► Check that:
  - Chip card option GS on the chip card is enabled.
  - Chip card option key restricted access ZB3 or the SAS system is enabled.
  - Pin code restricted access ZB1 is not at the same floor.
  - The visitor control is for one floor only.
  - PI control.
  - On the protected floor is installed:

LIN/LIP
Gong

GS, visitor control

► CF41 Ln S1/S2 PA3: To program the time period while the owner of the apartment can approve the visit, set the value = visitor operation [0 ... 12, 1 = 10s].

Sets the duration of the visitor request signalization and the enable time for the “access granted” button. For GS set to VL =3 → 30 s as standard value.

Variable	Description
CF41	Access restriction
n	Floor level
S1	Door side 1
S2	Door side 2

Configuration of car call key for customer

► To allow the customer to travel to his apartment, program a car call key switch ZB3 for the corresponding apartment floor level in the car.
► To allow the customer to travel to his apartment by using the card reader, install the parallel card reader CRC (ZBC2).

13.5 Configuring of parallel card reader interface CRC (ZBC2) up to 21 floors

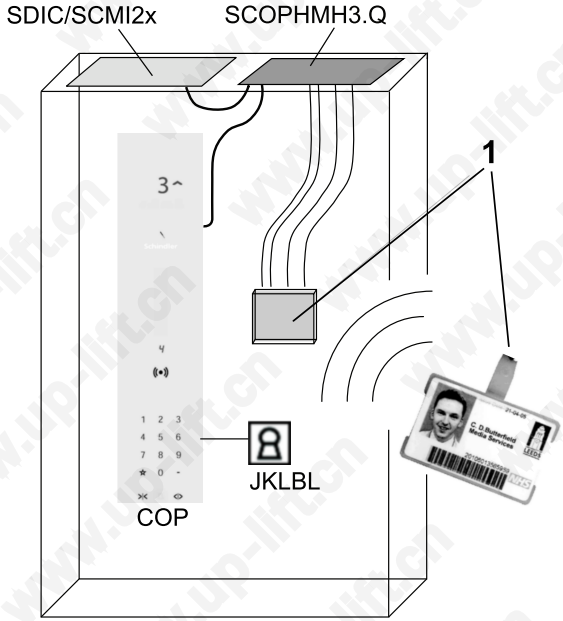

[0000030189]

1 3rd party card reader with 3rd party ID card

– With software version V9.6 or higher it is possible to have ZBC2 with multiple car calls. — the customer can choose the floor on the “regular” COP.
– With software version V9.7 or higher it is possible to have 2 “regular” COPs inside the car — but not with independent doors ZZ2 or ZZ3 — 2COPs and ZBC2 may not be released for sales.
– The JKLBL is used to activate the floor access restriction. It can be connected either to the COP or to a LCUX.
– As soon as the key switch JKLBL is activated (closed), the buttons for the restricted floors on the normal COP will be deactivated.

 Copyright © 2015 INVENTIO AG

– Car calls to restricted floors can only be given by means of the 3rd party card reader. (For example with help of an ID card.)
– Parallel card reader is not possible with ZZ2 or ZZ3 — independent doors.

► Check that:
  – The chip card option parallel card reader interface ZBC2 is enabled.
  – The 3rd party card reader outputs (contacts) are connected to the SCOPHMH3.Q.
  – If software version less than V9.7 only 1 “regular” COP inside the car is installed.
  – The Software version is V9.38 or higher.
  – The SCOPHMH parallel card reader interface installed according to schematics S274199 and S274603 — the power supply for the 3rd party card reader is taken from SDIC.XPOW, 230V. The 3rd party card reader outputs are connected as potential free contacts to SCOPHMH3.Q, connectors XDC1 ... XDC21, pin 2 →-3.).
  – The JKLBL normally open contact is connected to the input:

COP or
LCUX.

► If the SCOPHMH is installed after the learning travel: To detect the SCOPHMH, use command 129.

Configuration of JKLBL

► If JKLBL at COP: Set the value of CF05 PAn = 052 — JKLBL.

CF05	COP input
n	Input — XKEY ... on COP

► If JKLBL at LCUX: Set the value of CF40 Ln PAx = 052 — JKLBL.

CF40	BIO bus node configuration
n	Floor level, where LCUX is connected
x	Input — IO ... on LCUX

Configuration of the floors where the access should be restricted

► CF41 Ln PA99: Set the value = 1 — ZBC2. restricted exit from the car to the floor. Car call disabled.

Variable	Description
CF41	Access restriction

Variable	Description
n	Floor level, where the access should be restricted
PA99	Type of restriction

– Repeat for all floor levels, where the access should be restricted.

At least one floor has to be configured as a public floor, to allow the passenger to leave the car and the building. In normal case it is the main floor.

13.6 Configuring of parallel card reader interface CRC (ZBC2) up to 35 floors

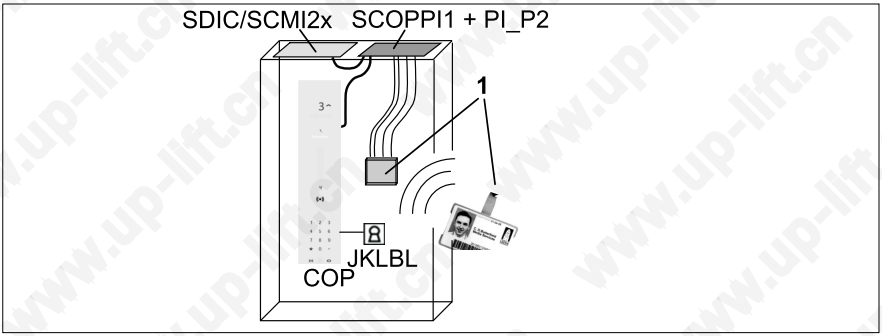

[0000032885]

1 3rd party card reader with 3rd party ID card

– It is possible to have 2 “regular” COPs inside the car — but not with independent doors ZZ2 or ZZ3 — 2COPs and ZBC2 may not be released for sales.
– It is possible to have ZBC2 with multiple car calls. — the customer can choose the floor on the “regular” COP, the time-out is defined in CF06 PA3.
– The JKLBL is used to activate the floor access restriction. It can be connected either to the COP or to a LCUX.
– Parallel card reader is not possible with ZZ2 or ZZ3 — independent doors.
– As soon as the key switch JKLBL is activated (closed), the buttons for the restricted floors on the normal COP will be deactivated.
– Car calls to restricted floors can only be given by means of the 3rd party card reader. (For example with help of an ID card.)

► Check that:
  – Chip card option parallel card reader interface ZBC2 is enabled.
  – Software version is V10.02 or higher.

 Copyright © 2015 INVENTIO AG

– The 3rd party card reader outputs (contacts) are connected to the SCOPPI1.Q via the connector PCBA PI_P2.
– The power supply for the 3rd party card reader is taken from SDIC. XPOW, 230V.
– The parallel card reader interface SCOPPI1 and PI_P2 connector PCBA are installed according to schematics S277388 and S277389.
– The JKLBL normally open contact is connected to the input:

COP or
LCUX.

► If the SCOPHMH is installed after the learning travel: To detect the SCOPHMH, use command 129.

► To use the SCOPPI as parallel car interface, on the SCOPPI, set the DIP switches:

The SCOPPI must be configured to its connecting position in the COP chain.

COP	DIP1	DIP2	DIP3	DIP4
First	0	0	1	0
Second	0	0	1	0
Third	1	0	1	0

Configuration of JKLBL

► If JKLBL at COP: Set the value of CF05 C1/C2 PAn = 052 — JKLBL.

CF05	COP input
C1	1. COP
C2	2. COP
n	Input — XKEY ... on COP1 or COP2

► If JKLBL at LCUX: Set the value of CF40 Ln PAx = 052 — JKLBL.

CF40	BIO bus nodes configuration
n	Floor level, where LCUX is connected
x	Input — IO ... on LCUX

Configuration of SCOPPI as parallel car reader interface

To use the SCOPPI as parallel card reader interface, the SCOPPI must be configured to its connecting position in the COP chain. DIP switches: See table above.

► Set the value of CF06 PAx = 1. COP.

CF06	COP parameters
x = 27	1. COP
x = 28	2. COP
x = 29	3. COP.

Configuration of the restricted access floors

► CF41 Ln PA99: Set the value = 1 — ZBC2. restricted exit from the car to the floor. Car call disabled.

Variable	Description
CF41	Access restriction
n	Floor level, where the access should be restricted
PA99	Type of restriction

► Repeat for all floor levels, where the access should be restricted.

At least one floor has to be configured as a public floor, to allow the passenger to leave the car and the building. In normal case it is the main floor.

 Copyright © 2015 INVENTIO AG

14 Configuring of group control

14.1 Duplex general information

Variants

– Duplex connection with RS232 cable — general application.
– Duplex connection with overlay box — special application.

Duplex connection with RS232 cable

SIM card option “DUPLEX” must be present on both elevators.

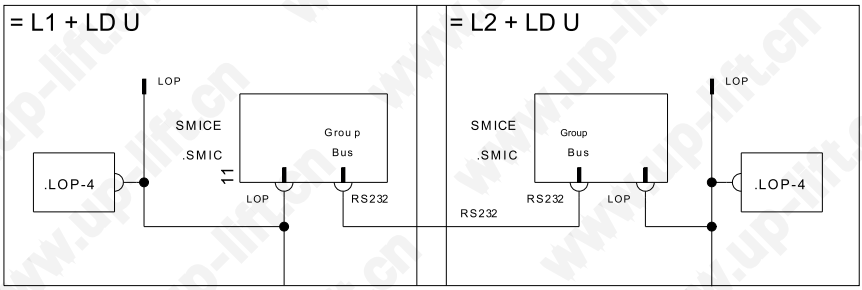

RS232 connection. [0000030105]

When to connect the elevators:

– Standard duplex: Connection can be done before or after the complete configuration.
– Asymmetric duplex: Connection must be done before the configuration. (See chapter Asymmetric Duplex).
– Duplex with independent doors (ZZ2 or ZZ3): Connection must be done after each elevator has been configured completely independent.

Duplex connection with overlay box

– SIM card option “DUPLEX” must not be present.
– Not possible with independent doors (ZZ2 or ZZ3).

14.2 Configuring of duplex with LOPs-FIGS and single riser

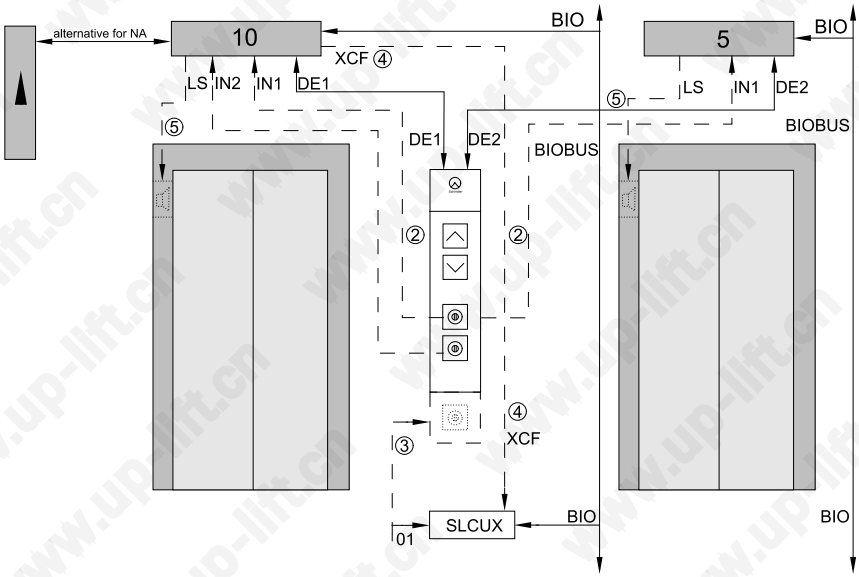

Single riser [0000030175]

 Copyright © 2015 INVENTIO AG

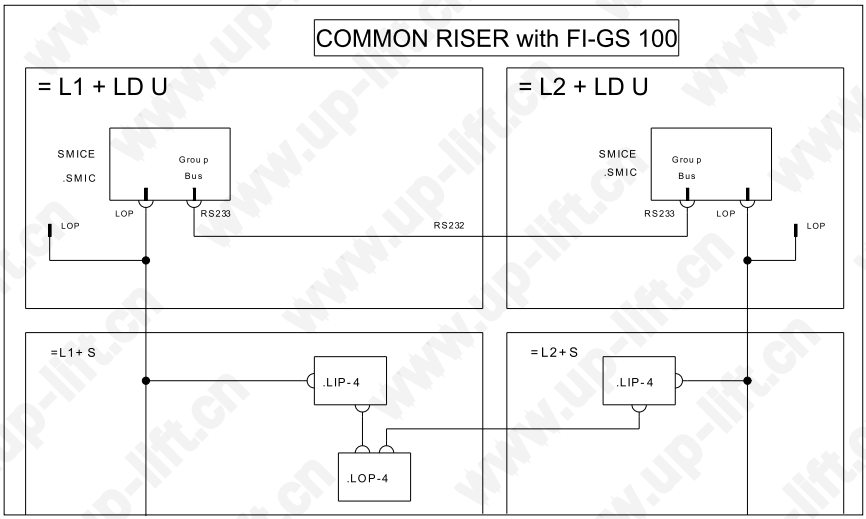

Schematics [0000030106]

Description

– The LIPs are connected to the BIO bus in each elevators.
– The common LOP is connected at both LIPs.
– Each LOP and LIP needs to be configured with an unique address.
– LOPs and LIPs commissioning is done during LOP configuration.

► Check that:
  – Duplex systems: Only 1 LOP per floor is installed.
  – The LIPs are installed at each elevator.
  – The LOPs type FIGS is installed.

14.3 Configuring of duplex with LOPs-FIGL and single riser

The chapter describes the configuration of the LOPs-FIGL under the following conditions:

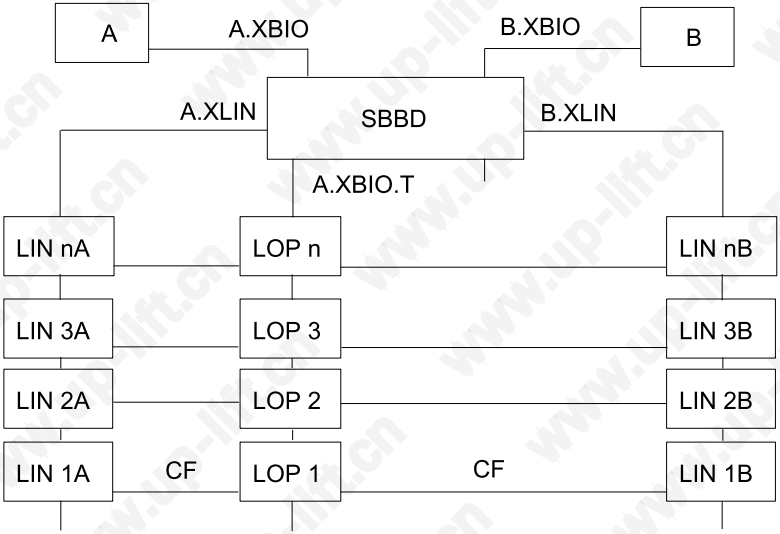

Duplex with 1 LOP per floor [0000030137]

Description

- If both elevators A and B have a power supply, the LOPs are connected to elevator A.
- If elevator A is without a power supply and elevator B has a power supply then the LOPs are connected to the elevator B automatically.
- LINs are always connected to the corresponding elevator.

On floors with LCUX and LIN it may be necessary to connect the LCUX and the LIN to the LOP with a specially made “Y-synchronization XCF cable”. (LCUX and LIN connected parallel to LOP). Otherwise there may be problems to configure the key inputs and outputs.

The address configuration on the LIN52 and LCUX2.Q has to be done with the magnet or by using the input during the same countdown the LOP is addressed.

► Check that:
  - Duplex system: Only 1 LOP per floor is installed.
  - LOP-FIGLs are installed.

 Copyright © 2015 INVENTIO AG

- ► Connect all LINs of elevator B to the LOPs with the XCF cable.
- ► Switch the power of elevator A = off.
  The LOPs are now connected to the BIO bus of elevator B.
- ► Do the LOP address configuration for elevator B for all floors.

  The LOP counting is not required.
- ► Switch the power of elevator A = on.
  The LOPs are now connected to the BIO bus of elevator A.
- ► Do the LOP counting in CF00 LE00 for elevator B.

  Only the devices connected to elevator B are stored in the table of elevator control B.
- ► Connect all LINs of elevator A to the LOPs with the XCF cable.
- ► Do the LOP address configuration for elevator A for all floors.

  Elevator B could remain with power on.
- ► Do the LOP counting in CF00 LE00 for elevator A.

14.4 Configuring of asymmetric duplex

- ► Check that:
  - – The chip card option “DUPLEX” on both elevators are set.
  - – KS policy.

    Possibility to give on the last common floor a call in direction of the extreme floors.
  - – No overlay boxes are installed.

    Asymmetric duplex is not possible with overlay boxes.
  - – Additional landing calls (DCW-U/D key switches or push buttons) to call the CW elevator which serves all floors are installed for more customer comfort.Otherwise the customer may have to change the elevator on the last common floor.

Asymmetry types allowed if software version less than V11

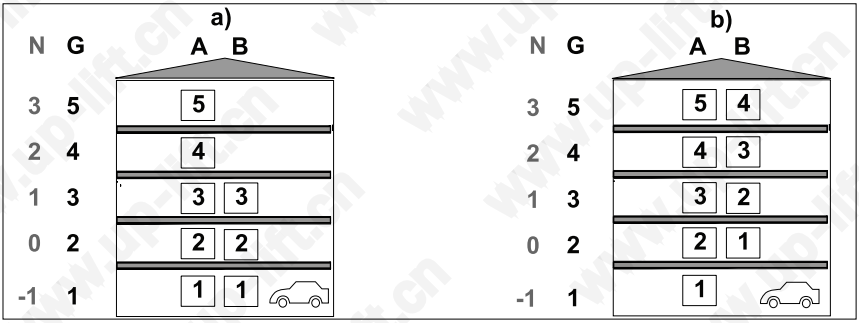

[0000030107]

a, b	Type of asymmetry	**A, B**	Elevator floor levels
N	Customer floor naming (visible on COP)	**G**	Group floor levels (starts always on the lowest position of the whole group)

► Check the RS232 cable connection between the 2 elevators.

► If available, install the additional landing call inputs (DCW-U/D).

These landing calls can be installed on floors which are served by both elevators. (Maybe the customer would like to have the possibility to call the preferred elevator only on some of these floors)

– Use an LCUX (or input 4 on the LOP) to connect either an additional push button or a key switch.

► Switch both elevators = on.

► To configure the lowest group floor level for each elevator, set in each elevator in CF86 PA1 the value = lowest floor level of this elevator.

Example a	**Example b**
See graphic	See graphic
A: CF86, PA1, VL = 1	A: CF86, PA1, VL = 1
B: CF86, PA1, VL = 1	B: CF86, PA1, VL = 2

► If inputs DCW-U/D: To configure the elevator which serves all floors as CW elevator, set in CF07 PA8 the value = 1 (preferred elevator).

Value	**Description**
0	Non CW elevator
1	CW elevator

Example a	**Example b**
See graphic	See graphic
A: CF07, PA8, VL = 1	A: CF07, PA8, VL = 1
B: CF07, PA8, VL = 0	A: CF07, PA8, VL = 0

► Perform the LOP configuration for both elevators.

► If inputs DCW-U/D:

– Configure the input DCW-U: BMK = 007 (Preferred car upwards).

– Configure the input DCW-D: BMK = 008 (Preferred car downwards).

Additional asymmetry types allowed if software version V11 or higher

 Copyright © 2015 INVENTIO AG

Since software version V11 the following types of asymmetric are also allowed:

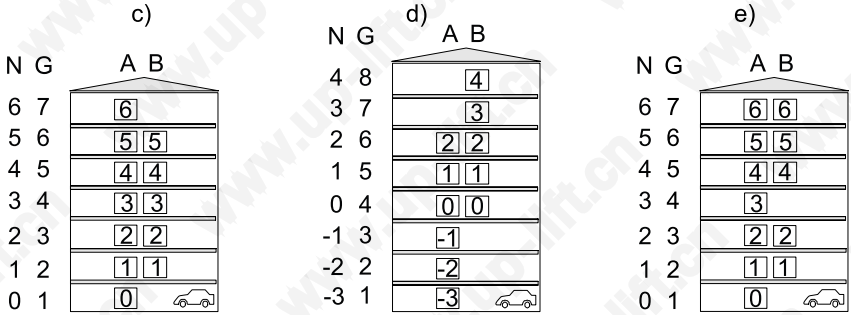

[0000032886]

c	Type of inner asymmetry	**d**	Type of up and down asymmetry
e	Type of hole asymmetry	**N**	Customer floor naming (visible on COP)
A, B	Elevator floor levels of each elevator (used by the control, for example during configuration)	**G**	Group floor levels (starts always on the lowest position of the whole group)

Since software version V11 it is possible to set precise building level to cope complex layouts.

► If SBBD available: Configure the asymmetric before configuring the LOP.

► If long interfloor distance: Check the configuration for the blind floor (CF26) before configuring the asymmetric (CF86).

Example for the configuration:

– Elevator A has 10 floors, elevator B has 9 floors.
– Elevator A and B shares underground (U), lobby (G) and dinning room (D).
– Elevator A has exclusive access to attic (A) and garage (-1 ... –3).
– Elevator B has exclusive access to hotel room (1 ... 5).

Group level	Floor designation	Elevator A Available floor	Elevator A PAx	Elevator B Available floor	Elevator B PAx
15	A3	15	PA10 = 15		
14	A2	14	PA9 = 14		
13	A1	13	PA8 = 13		
12	D7	12	PA7 = 12	12	PA9 = 12
11	D6	11	PA6 = 11	11	PA8 = 11
10	5			10	PA7 = 10
9	4			9	PA6 = 9
8	3			8	PA5 = 8
7	2			7	PA4 = 7
6	1			6	PA3 = 6
5	G	5	PA5 = 5	5	PA2 = 5
4	–1	4	PA4 = 4		
3	–2	3	PA3 = 3		
2	–3	2	PA2 = 2		
1	U	1	PA1 = 1	1	PA1 = 1

14.5 Configuring of triplex with overlay box

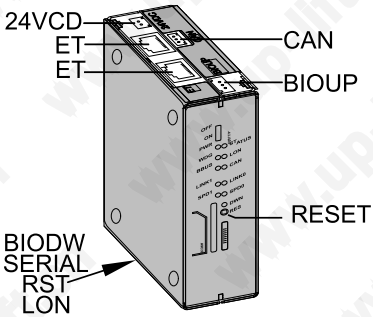

[0000030108]

 Copyright © 2015 INVENTIO AG

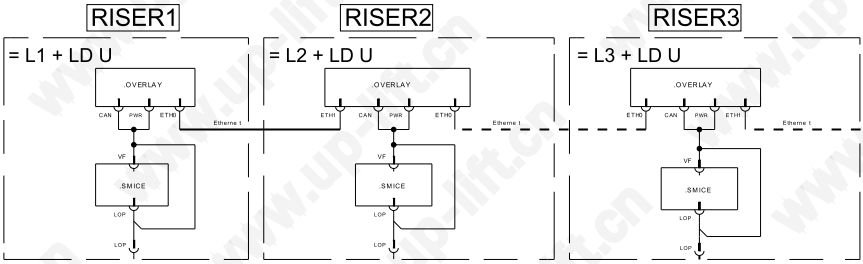

Overlay box connections [0000030109]

– No special chip card option for triplex is necessary.
– Do the commissioning of each elevator as if it would be a simplex (or duplex) elevator.

► Check that:
  – The chip card policy KS is enabled.
  – The function of each elevator — landing calls, car calls indicators are in function.
  – The LOP configuration of each elevator is done.
  – No cables are connected to the overlay boxes.
  – The Ethernet cables are routed between the elevators, but not yet connected to the overlay boxes.

► CF04 PA1: Set the value = elevator.

Elevator	Value
A	1
B	2
C	3

► Switch all elevators = off.

► At all elevators connect:
  – All Y-cable (LOP, VF).
  – All overlay boxes with the Y-cable (PWR, CAN).
  – All Ethernet cables.

If FIGS see: schematics S277244.
If FIGL see: schematics S277208.

► Switch all elevators = on.

► At each elevator: HMI menu 10: Perform command 136 (overlay detection).

15 Other components

15.1 Embedded telemonitoring and alarm ETMA

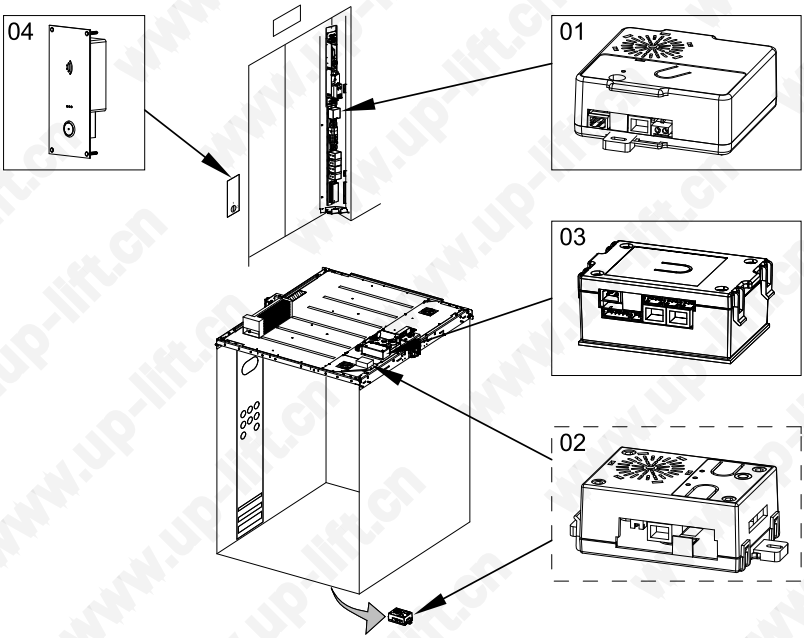

ETMA configuration [0000030138]

The configuration of the embedded telemonitoring and Alarm ETMA is included in the instruction document EJ 41700380 which is delivered with the ETMA (included in the package).

ETMA commissioning procedure (included diagnostics)

 Copyright © 2015 INVENTIO AG

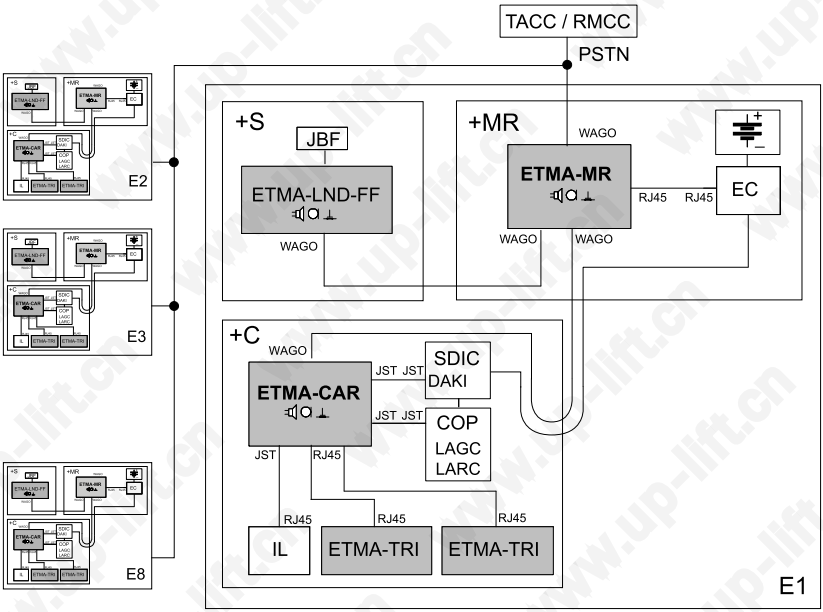

ETMA commissioning procedure [0000030117]

The step-by-step procedure for the automatic commissioning procedure is described in the ETMA document K 40700049.

	Description
TACC	Telealarm control center
RMCC	Remote monitoring control center
PSTN	Public switched telephone network — telephone line
EC	Elevator control
ETMA-MR	ETMA machine room module — master
ETMA-CAR	ETMA car module — slave
ETMA-LND-FF	ETMA module for fire fighter, installed on the landing floor — slave
ETMA-TR	ETMA triphonie — additional ETMA box below and above the car for the service technician.
IL	Inductive loop — sends wireless signal to hearing aids of disabled persons in the car.
EI ... E8	Elevator 1 ... Elevator 8 — group

15.2 Retainer Plus and ECM Plus

Retainer Plus

Is a chip card option — no configuration is needed.

ECM Plus

- If the ECM+ device is connected, the ECM+ calibration will be performed automatically.
- If the calibration is not successful, the elevator changes to persistent fatal error state and the message E_TM_ECM_DEVICE_UNAVAILABLE will be displayed in the error log.

 Copyright © 2015 INVENTIO AG

16 BMK function codes

Inputs

Code	Function	Description	Contact	Location
00		No function		
02	JDC	Key switch car call [ZB3]	NO	COP
04	DFDC	Push button release push button car call	NO	
07	DCW-U	Push button car selection up	NO	
08	DCW-D	Push button car selection down	NO	
10	JDNF	Key switch / lamp emergency floor call	NO	
11	KL-V	Contact full load	NC	
12	KL-X	Contact overload	NC	
13	KL-M	Contact minimal load	NO	
17	DE-U / LDEU	Push button and lamp landing call up	NO	LOP
18	DE-D / LDED	Push button and lamp landing call down	NO	LOP
19	JDE-U	Key switch landing call up	NO	LOP
20	JDE-D	Key switch landing call down	NO	LOP
22	KTTC	Car partition door	NC	
23	JBFFG	Fire service firefighter	NO	COP
24	JBFFGH1	Fire service firefighter - recall floor 1	NC	
25	JBFFGH2	Fire service firefighter - recall floor 2	NC	
26	JBFH1	Fire service first recall floor	NC	
27	JBFH2	Fire service second recall floor	NC	
34	KL-H	Contact half load	NO	
36	KKE	Contact supervision unlocked	NO	

Code	Function	Description	Contact	Location
39	DDFLI	Bypass landing calls, push button direct travel attendant service [LI]	NO	
40	DLI	Start travel, attendant service, see CF06 PA12 [LI]	NO	
41	DLI-U	Change travel direction up [LI]	NO	
42	DLI-D	Change travel direction down [LI]	NO	
48	KTHS	Hoistway thermostat	NO	LCUX
49	JAB / RAB	Switch/relay out of service [JAB]	NO	LOP, LCUX
52	JKLBL	Switch car call locking, parallel card reader [ZBC2]	NO	
53	JLC	Switch car call locking, parallel card reader [ZBC2]	NO	
54	JLI	Switch on/off attendant service [LI]	NO	COP
56	JNFF	Switch firefighter service	NC	COP, LOP, LCUX
57	JNFF-S	Switch firefighter service start trip	NC	
58	JNO	Switch emergency power operation. Release car for travel [NS21]	NO	LCUX
59	JRVC	Switch reservation service [RV1]	NO	COP
61	JRVCP	Switch reservation parking [RV2]	NO	
66	JVEC	Switch fan on car	NO	
69	KGEB	KGEB contact counterweight displaced [EB]	NC	

 Copyright © 2015 INVENTIO AG

Code	Function	Description	Contact	Location
77	RFEF	Relay evacuation travel release [NS21]	NO	
87	JHCL-I	Switch stop car - In car feedback	NC	
91	DH	Push button stop	NC	COP
97	DEB-A	Push button counterweight earthquake reset	NO	
99	JBF	Switch fire service (secure input)	NC	LOP, LCUX
100	JBF-A	Switch fire service off (secure input)	NO	LCUX
106	JSDC	Key switch lock car call	NO	
111	JZH	Switch enforced stop	NO	
112	KBF	Contact activation fire service fire detector	NC	LCUX
113	KBFH1	Contact activation fire service, first recall floor	NC	LCUX
114	KBFH2	Contact activation fire service, second recall floor	NC	LCUX
116	KEB	Contact earthquake [EB]	NC	
120	RNO	Relay emergency power service [NS21]	NC	
121	RSPE / KSPE	Relay blocking floor [EBR1] (secure input)	NC	LCUX
179	JSDC_G	Key switch lock car call group [ZBC1] CF81	NO	LCUX
184	JHCC	Switch stop car - In car	NO	
185	DVEC	Car fan button	NO	
241	DEH-U	Push button hall call handicapped - up	NO	
242	DEH-D	Push button hall call handicapped - down	NO	

Code	Function	Description	Contact	Location
256	KKE2	Door lock supervision access side 2, used for Haushahn door systems	NO	
257	JDE-E	Key switch floor lock permission	NO	
260	KUESG	Contact bridging hoistway pit contacts - first	NC	
261	KUESG1	Contact bridging hoistway pit contacts - second	NC	
263	KSG-A	Contact hoistway pit contacts off	NO	
264	JSPS	Key switch floor locked [ZBCE] CF82	NO	
265	KTL	Contact mechanical door safety edge	NC	
266	KSR	Contact sprinkler recall	NC	
274	JSK-A	Contact smoke recall off	NO	
276	KOL-M	Contact minimal oil level	NO	
279	KTEC	Contact door elevator controller box	NC	
281	KNA-I	Contact emergency exit feedback	NO	
546	KSKHW	Contact smoke detector hoistway	NC	
789	KET-O	Contact door open end	NO	
790	KET-S	Contact door closed end	NO	
792	KSKB	Contact closing force limiter	NO	
848	PHS	PHS	NO	
871	KEBVL	Contact earthquake very low	NC	
872	KEBL	Contact earthquake low	NC	

 Copyright © 2015 INVENTIO AG

Code	Function	Description	Contact	Location
873	KEBH	Contact earthquake high	NC	
875	JEB	Key switch earthquake	NC	
883	JZHPK	Switch force stop panic control	NO	
886	KLS-D	Contact limit hoistway - down	NC	
887	KLS-U	Contact limit hoistway - up	NC	
889	JZHPK-A	Switch force stop panic control - off	NO	
891	KNET	Contact emergency unlocking landing door	NC	
892	KSM	Car position relative to middle hoistway		
896	DTX-O	Push button extended door open time	NO	
900	GPIN1AND	General purpose input 1 with AND logic	NO	
902	GPIN2OR	General purpose input 2 with OR logic	NO	
967	DVEC	Toggle switch for car ventilation	NO	
1091	2PHS	2PHS	NO	
1095	2KET-O	Contact rear door open end	NO	
1096	2KET-S	Contact rear door close end	NO	
1097	2KSKB	Contact rear closing force limiter	NO	

Outputs

Code	Function	Description	Location
37	LUB	Lamp maintenance and error, Korea	
38	LRV	Lamp independent control reservation	

Code	Function	Description	Location
49	LAB	Lamp out of service (old code, new code is 131)	LCUX
56	LFF	Lamp firefighter	
131	LAB	Lamp out of service (new code) output LED on LCUX is off when out of service is true	LCUX
134	LAB-E	Lamp out of service active, acknowledgment JAB	LCUX
136	LBFC	Lamp fire service active, on car	
140	LHC	Lamp car here	LCUX
145	LEF	Lamp evacuation travel [BR4-NZ]	
146	LGEB	Lamp counterweight displaced [EB]	
147	LGS	Lamp evacuation travel [BR4-NZ]	
151	LLI-U	Lamp direction up, attendant service [LI]	
152	LLI-D	Lamp direction down, attendant service [LI]	
154	LNFC-U	Lamp emergency service, on car [NF1]	
156	LNOC	Lamp emergency power service, on car [NS21]	
157	LRC-U	Lamp car direction up	
158	LRC-D	Lamp car direction down	
163	LW-U	Lamp further travel up	
164	LW-D	Lamp further travel down	
167	LL-X	Lamp overload	
170	RBF	Fire service active in machine room [JBF]	
172	RE-A	Landing calls service suspended (for example reservation)	
173	REFE1	Relay evacuation travel end	
174	REFEH1	Relay evacuation travel end recall floor 1	

 Copyright © 2015 INVENTIO AG

Code	Function	Description	Location
175	REFEH2	Relay evacuation travel end recall floor 2	
177	RIB	Elevator normal mode	
183	RSM	Elevator fatal or persistent fatal error	
186	SUMC	Buzzer on car	
190	GA-k	Gong arrival (k = floor number)	LCUX
205	LBF	Lamp fire service active on landing, for group [KBF]	
207	LEB	Lamp earthquake service active, for group [EB]	
213	RFBE-k	Relay floor lighting (k = floor number)	LCUX
214	SUMP	Buzzer porter	
225	LL-V	Lamp full load	
251	GA-D	Gong arrival landing down	
252	GA-U	Gong arrival landing up	
258	RUESG	Relay bridging hoistway pit contacts - first	
259	RUESG1	Relay bridging hoistway pit contacts - second	
262	RSG-A	Relay hoistway pit contact off	
275	LOL-M	Lamp minimal oil level	
277	RLUO	Relay indicator unauthorized opening of a landing door	
280	RKTEC	Relay contact door elevator controller cabinet	
797	LE-D	Lamp acknowledge floor call down	
798	LE-U	Lamp acknowledge floor call up	
857	RLC-A	Relay lamp car off	
859	RPSC-D	Relay standby power mode on car driving signal	
860	RPSM-D	Relay standby power mode in machine room driving signal	
868	LAPS	Lamp standby power mode on	
874	LEBIB	Lamp earthquake evacuation	

Code	Function	Description	Location
879	LEBEFE	Lamp earthquake evacuation completed	
880	LEBEFEG	Lamp earthquake evacuation completed group	
881	LVC	Lamp leave car	
882	LDTOB	Lamp DT-O backlight	
885	LAEFE	Lamp automatic evacuation travel completed	
888	LEFFS	Lamp evacuation travel - forced stop each floor	
890	LNOIB	Lamp emergency power UPS in operation	
895	LDA	Lamp DA backlight	
897	LEH-U	Lamp handicapped acknowledge floor call up	
898	LEH-D	Lamp handicapped acknowledge floor call down	
898	LEH-D	Lamp handicapped acknowledge floor call down	
899	LSI	Lamp safety incident	
901	GPOUT1	General purpose output 1	
903	GPOUT2	General purpose output 2	
906	LDTXOB	Lamp extended DT-O backlight	

 Copyright © 2015 INVENTIO AG

17 HMI user interface

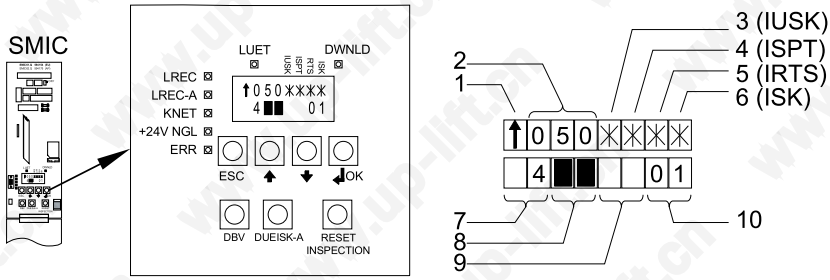

[0000029989]

1	Car travel direction	**6**	Status safety circuit input ISK
2	Car speed [0.01 m/s]	**7**	Car position / floor level
3	Status safety circuit input IUSK	**8**	Status of door 1
4	Status safety circuit input ISPT	**9**	Status of door 2
5	Status safety circuit input IRTS	**10**	Status of elevator

Buttons

Button	Function
ESC	– Go one step backwards – Leave current menu / item.
▲ ▼	– Select menu / submenu / command / parameter – Change the value.
OK	– Enter the menu / submenu / command / parameter – Confirm / save the value / command.

Door status

HMI	Description	HMI	Description
	Door open KET-O = active		Door closed KET-S = active
	Door opening		Door closing
	Door locked		Door stopped
? ?	Door status unknown		

Car position

HMI	Description	HMI	Description
1 ... 35	Car position		
?	Invalid KSE-U = 0 / KSE-D = 0		Above KSE-U KSE-U = 0 / KSE-D = 1
	Between KSE-D and KSE-U KSE-U = 1 / KSE-D = 1		Below KSE-D KSE-U = 1 / KSE-D = 0

Travel direction

HMI	Description	HMI	Description
-	Not defined		Up direction
	Down direction		

Status of the safety circuit

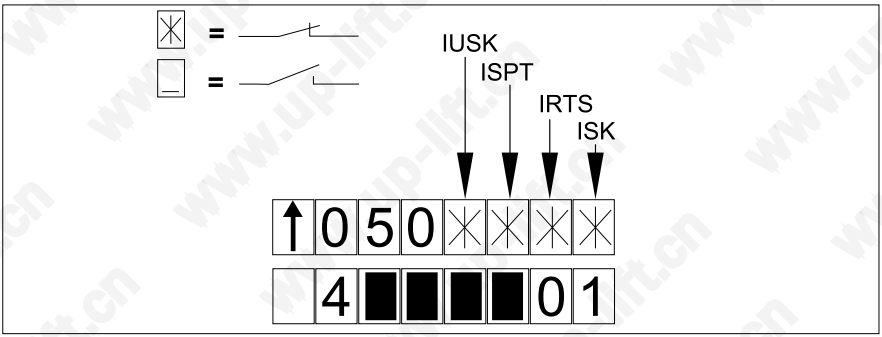

Safety circuit status on HMI [0000028802]

 Copyright © 2015 INVENTIO AG

Display	Description
IUSK	The power supply safety circuit 24 ... 55 [VDC] = OK. – Asterisk = on indicates that the safety circuit is closed and energized. – Asterisk = blinking (2 Hz) indicates that the safety circuit is not energized. Reason: The safety circuit overcurrent protection has been activated. Press the button DIUSK to reset the safety circuit overcurrent protection. – __ indicates that the safety circuit up to contact IUSK is open.
ISPT	The safety circuit hoistway pit including JHSG is closed.
IRTS	The safety circuit hoistway pit and the landing doors is closed.
ISK	The safety circuit is completely closed.

Elevator status

The elevator status on the HMI indicates which current service is running. For more information see chapter Elevator status.

17.1 Main menu

Menu	Description
10	Special commands
20	Automatic assisted acceptance tests The acceptance tests are available in the acceptance tests document for the product.
30	Status, system information
40	Configuration mode
50	Diagnostics, error log
60	Statistics
70	ACVF frequency converter monitoring

17.2 Configuration menu structure

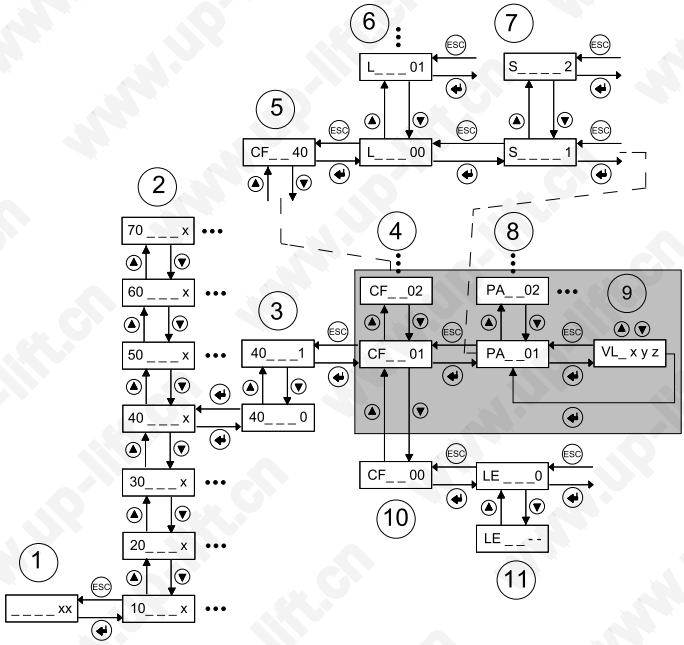

[0000030124]

1 Menu entry point — indicating car position xx

2 Main menus — 10, 20, 30 ...

3 Activation of main menu 40 — configuration menu 40

4 Configuration groups — within configuration menu CF

5 Special case within main menu 40: configuration groups CF40, CF41

6 Floor level — CF40, CF41

7 Door side — in case of independent doors, CF40, CF41

8 Parameter — within selected configuration group

9 Value — of the selected parameter

10 Special case within main menu 40: LOP configuration — CF00

11 Floor level — CF00

 Copyright © 2015 INVENTIO AG

17.3 Menu elements

Menu Element	Description	Applicability
CF	Configuration group in main menu 40	
PA	Parameter	
L	Level → CF40 00 = all floor levels → CF41 L01 = bottom floor level L02 = second floor level	
S	Door side — Independent door operation S 1 = door side 1 S 2 = door side 2	– Only visible in case of independent door operation (ZZ2 or ZZ3) on the chip card. – Applies to CF40 and CF41 only.
LE	Level	CF00
VL	Value	

17.4 Adjusting of parameter values

► To enter the configuration mode, navigate to the main menu 40 and press OK.
► To enable the configuration mode, set the value = 1 and press OK.
The car travels to the configuration floor and the door opens.
► Select the required CF (00 ... 99) and press OK.
► Navigate to the required PA (0 .. 99) and press OK.
► Adjust the value and press OK.
► To return to main menu 40, press ESC until [4 0 _ _ _ 1] appears.
► To disable the configuration mode, set the value = 0 and press OK.
► To exit the main menus, press ESC.
► To activate the changes, press reset.

18 Diagnostics

18.1 Elevator status

The system status shows the current control mode

Code	Elevator status	Information
00	Out of service	JAB or SAB is active. Check: – JAB is switched on – Menu 10 command 108 HMI: [108 1] = JAB active – Reset SAB (JAB via telemonitoring), menu 10 command 114.
01	Passenger travel mode	Normal service is active.
02	Independent service	Reservation control is active. Service RV1 or RV2 is active. Check: JRVC / JRVCP.
03	Fire service	Fire recall operation is active. Check JBF / KBF
04	Firefighter service	Firefighter operation is active.
05	Emergency power mode	Emergency power with disabled load measuring is active.
06	Earthquake service	Earthquake service is active following the detection of an earthquake condition.
07	Emergency medical technician service	Reserve an elevator for emergency transports is active.
08	Sprinkler service	Sprinkler service is active following activation of the sprinkler system.
09	Water in pit service	Recall operation due to water in the pit is active.

 Copyright © 2015 INVENTIO AG

Code	Elevator status	Information
10	Attendant service (JLI)	Attendant service is active. The elevator operation is controlled by the attendant in the car.
11	Passenger travel operation without load monitoring	Normal operation with disabled load measuring is active.
12	Passenger release travel operation	Reduced operation to releases the passengers before it changes to breakdown state is active.
13	Power saving mode	
29	Move around	The elevator performs simulated traffic. Software ≥ V10
37	No operation due to a stop caused from inside the car	Emergency stop operation from inside the car is active.
38	No operation due to stop from inside the car during firefighter mode.	Firefighter stop switch in the car operation is active. **Hint:** While in firefighter operation the standard stop switch (if present) figures also as a firefighter stop switch.
39	No operation due to car overload	Overload condition lasting for more than 30 seconds is active.
40	No operation due to invalid configuration data	The elevator is blocked based on invalid configuration detected from the elevator control. For example a chip card failure.
41	No operation due to invalid hoistway image	The elevator is blocked based on missing necessary shaft information. For example the learning travel is not performed.

Code	Elevator status	Information
42	No operation due to invalid LMS configuration	The elevator is blocked based on missing or invalid load measuring configuration For example the car load measurement device is not calibrated.
43	No operation due to invalid drive configuration	The elevator is blocked based on missing or invalid drive configuration data
45	Out of service STM monitoring failure	The elevator is blocked for automatic operation based on failure of the STM insufficient residual strength monitoring.
50	Service technician visit	Service operation is active. Somebody (service technician) is on site and performing a maintenance work. The elevator is not available for the public.
51	Installation travel mode	Installation travel mode is active Check HMI menu 10 command 105
52	Configuration mode	Configuration mode is active. HMI menu 40.
53	Recall travel mode (JRH)	Recall travel mode controlled from a person in the machine room or at the LDU is active.
54	Inspection travel mode (JREC).	Inspection travel mode controlled from a person on the car roof is active. May be indicated during start up of the elevator
55	Inspection in car mode	In-car inspection operation is active.
56	Hoistway access control operation	Hoistway access control operation (inspection terminal landing) is active.
57	Test travel mode - KFM	Test travel mode is active. KFM activation by use of HMI menu 10 command 104.

 Copyright © 2015 INVENTIO AG

Code	Elevator status	Information
58	Acceptance test mode	Automatic acceptance test mode is active.
59	Learning travel	Learning travel mode is active.
60	Inspection preparation travel	Automatic car positioning is in progress to provide an easy access to the car roof.
61	Overspeed governor reset travel	Specific overspeed governor reset travel operation is active, which allows the manual resetting of the tripped car overspeed governor.
63	Operation with disabled car load monitoring	
70	Elevator recovery	An elevator recovery is in progress after a recoverable error. Or the elevator tries to recover.
71	Elevator temperature recovery	An elevator recovery is in progress after an overtemperature condition (hoisting motor, door motor).
72	Elevator car position recovery	An elevator recovery is in progress after a car position error (synchronization, ASMTL, etc.). If the car is not moving, check for the possible error. For example a faulty CAN bus connections.
73	Elevator door position recovery	An elevator recovery is in progress after a door error or door heart beat error.
74	Elevator backup power recovery	Recovering from a backup power (typically battery low) failure is active. Check the message log for more information (previous logged errors).
75	No operation due to safety chain open at ISPT	Blockage as a result of an interruption of the safety chain at ISPT is active.

Code	Elevator status	Information
80	Stop switch	The elevator is blocked after an emergency stop initiated by pressing any stop switch.
81	Stop switch top of car	Active stop switch on the car roof.
82	Stop switch machine room	Active stop switch in the machine room
85	Stop switch hoistway head	Active stop switch in the hoistway head.
86	Stop switch pit	Active stop switch in the pit.
89	No operation due to a disabled monitor	Bypassed failure detection is active.
90	Elevator unknown state	
91	Elevator startup	The elevator (main controller) is starting up.
95	No operation due to power down	
97	Elevator breakdown persistent limited operation	
98	Elevator breakdown	Blockage as a result of a fatal error is active. Unblocking after a manual reset or power cycle. A previous evacuation trip was possible.
99	Elevator breakdown persistent	Permanently blockage is active. Unblocking after a special on-site procedure. A previous evacuation trip was possible. Software ≥ V9.72

 Copyright © 2015 INVENTIO AG

18.2 Accessing of error log

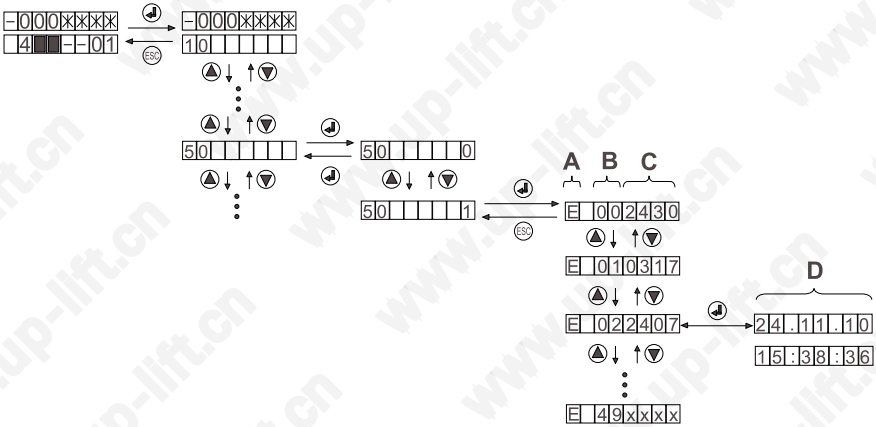

Main menu 50 [0000030125]

Pos	Name	Description
A	Message type	– E = Error – F = Fatal error – P = Persistent fatal error – I = Information Persistent Fatal Errors need a special error recovery procedure. Menu 10, command 101.
B	Error storage number	– 00 = Newest error – 49 = Oldest error
C	Error code	4 digits
D	Date and time	Of occurrence

► To enter the error log, set the value of menu 50 = 1.

[E_0 2 1 1 0 1] = Error with code 1101 = no signal from the car load cell.

Access to the code list (nnnn) of error messages in doc. EJ 604639

► To exit the error log, set the value of menu 50 = 0.

18.3 Error log description

HMI	Description
E YYXXXX	Error
F YYXXXX	Fatal error Recover of the elevator control: – Reset the controller – Recover procedure after fatal error.
P YYXXXX	Persistent fatal error. The elevator control is inoperative until the persistent error reset procedure. Recover of the elevator control: Recover procedure persistent fatal error.
E - - - - - -	Error history is deleted. To delete the error history, press enter until E - - - - - - is displayed.

 Copyright © 2015 INVENTIO AG

18.4 Recovering of system errors

18.4.1 Recovering of elevator control after fatal error

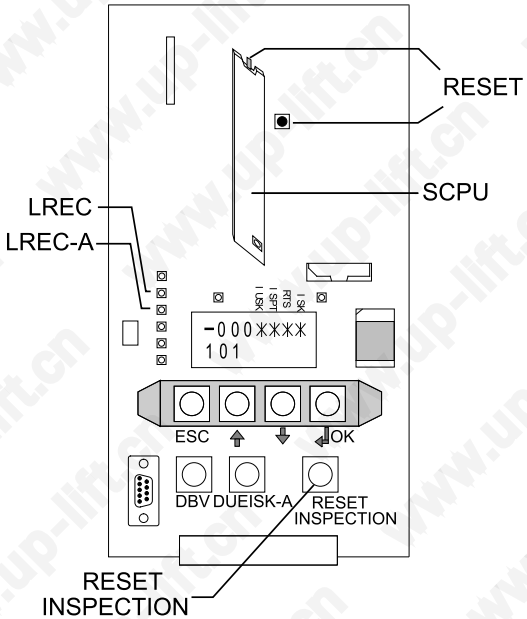

[0000030127]

A reset has to be performed after a software hang-up.

► To reset the elevator control, press on the SCPU the reset button.

If SMICE6x: Use the reset button on SMICE6x to reset the elevator control.

18.4.2 Recovering of elevator control after fatal error from car roof

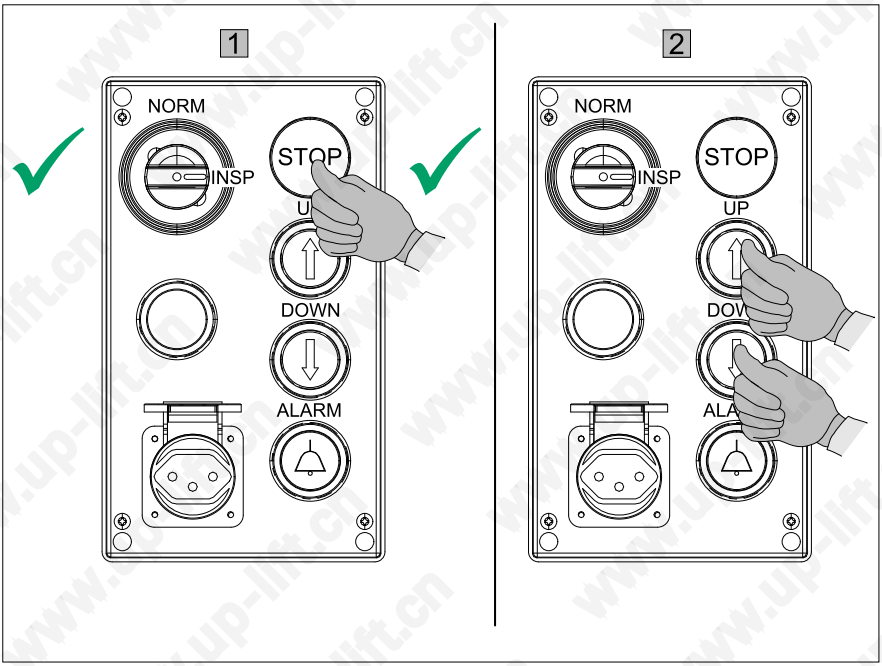

[0000028750]

- ► Car roof: Enable the inspection mode.
- ► Press the stop switch.
- ► To reset the elevator control, press the up direction button and the down direction button at the same time.

  Reset of the elevator control.

 Copyright © 2015 INVENTIO AG

18.4.3 Recovering of elevator control after persistent fatal error

Dispatch a persistent fatal error reset command to the elevator control and ACVF (Biodyn C BR).

Description

Used for clearance of persistent fatal errors related to:

- Preopening
- Releveling
- KNE
- KSE
- KB / KB1
- Safety circuit
- PHSx bridging
- Door lock monitoring
- Activated fire service
- Activated firefighter floor
- Bridged safety circuit.

⚠ DANGER

Resetting the system without rectifying the fault causing a persistent fatal error

- The persistent fatal error is deleted without the fault being fixed
- Serious injury or death resulting from the unrectified fault

Fix all faults before resetting the system.

► To recover the elevator control, set the value in command 101 = 1.
  - The reset is displayed by 1011.
  - After the reset the HMI displays [101 0] again.

► On the controller PCBA, press the reset button.

The system starts up and carries out the synchronizing travel.

18.4.4 Recovering of GBP

After an emergency stop with safety gear activation, the following procedure has to be carried out to restore normal operating mode.

- ► AS.ESE control panel: Switch the JRH = inspection.
- ► To access the car roof, move the car upwards near the top floor with the ESE control panel.
- ► AS PCBA SMIC(FC): Plug out KBV.
- ► Select command 103.
- ► PCBA SMIC: To bridge the KBV contact of the safety circuit, plug in the GBP reset connector to KBV.
- ► To enable the GBP reset mode, in command 103, set the value = 1.
- ► Car roof CCU/OKR: REC inspection panel: Switch the JREC = inspection.
- ► AS.ESE control panel: Switch the JRH = normal.
- ► To reset the KBV:
  - – Move the car upwards near to the KBV with the REC inspection panel.
  - – Reset the KBV.
- ► To leave the car, move the car downwards with the REC inspection panel.
  - – Leave the car.
- ► AS.ESE control panel: Switch the JRH = inspection.
- ► Car roof CCU/OKR: Switch the JREC = normal.
- ► AS. PCBA SMIC:
  - – Plug out GBP reset connector.
  - – Plug in KBV.
- ► To disable the GBP reset mode, set the value in command 103 = 0.
- ► AS.ESE control panel: Switch the JRH = normal.
  The car starts to the sync travel.

 Copyright © 2015 INVENTIO AG

18.4.5 Recovering of TSD21 system — short head / short pit

After a system with temporary safety device TSD has been used in inspection travel mode, it needs to be reset manually. The same reset may need to be necessary if the TSD supervision has been activated. (For example by opening a landing door when the KNET has been activated.)

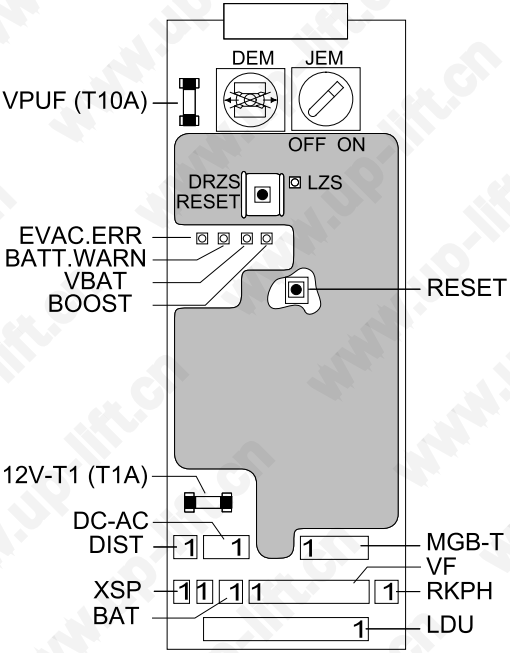

SEM [0000030133]

► Check that:
- The landing doors are closed and locked — KTS.
- The movable bolts below the car are in the inactive position.
- The inspection travel mode is = off.
- All stop switches = released.

Normal procedure

► To reset the system after the KNET supervision has been triggered, press the reset button DRZS on the SEM.
- If TSD21 and the red LED LZS = on. TSD21 supervision system has been triggered. A KNET landing door supervision contact has been activated.
- If TSD21 and the red LED LZS = off. TSD21 supervision not active. Normal operation.

Special procedure

- ► If Sematic doors and the DRZS reset does not work, bridge connector SMIC.BESE.
- ► To force the SEMATIC door to close, press the DRH-U button.

18.5 Indicated errors during LOP configuration

The Error are displayed on the car operation panel (COP) or car position indicator (CPI).

Press DT-O to confirm the error.

Repeat the configuration.

Code	Description
Ac	The LOP is successful configured
Br	The LOP with fire key is successful configured
E0 **Er**	No button has been pressed
E1	The wrong button has been pressed
E2	The button has been released to early.
E3	The LOP button state is missing.
E4	The slave (LIN or LCUX) button state is missing.
E5	The BIO 1 slave (LIN or LCUX) button state is missing.
E6	The BIO 2 slave (LIN or LCUX) button state is missing.
E7	No spare address is available.

 Copyright © 2015 INVENTIO AG

A A: Terms used

ACVF	Inverter (frequency converter)	AS	Location — controller cabinet
CANCP	PCBA — car operation panel	CCU	Car control unit — interface on car roof
COP	Car operating panel — car peripheral	ESE	Operating panel for recall travel — in machine room / at elevator controller
JH	Main switch (of elevator installation) / US: main line disconnect switch	JHC	Stop switch on operating panel for inspection travel (REC) — safety device
JHM	Stop switch on operating panel for recall travel (ESE) — safety device	JHSG	Stop switch in pit — safety device
JLBS	Hoistway light switch	JREC	Mode selector switch on operating panel for inspection travel (REC)
JRH	Mode selector switch on operating panel for recall travel (ESE)	KB, KB1	Limit switch on brake — safety device

www.up-lift.cn

KBV	Limit switch for overspeed governor system — safety device	KCBS	Limit switch for car blocking system (CBS) — indicates CBS engaged
KF	Limit switch on safety gear	KNE-U/D	Emergency limit switch at hoistway end — at top / at bottom — safety device
KP	Safety switch of car buffer	KPG	Safety switch of counterweight buffer
KSS	Slack rope switch (on suspension point)	KSSBV	Slack rope switch on overspeed governor
KTC	Car door switch — indicates door closed (safety contact)	KTS	Landing door switch — indicates door closed
LDU	Landing door unit	LOP	Landing operating panel
MGB	Magnetic brake	MR	Machine room
MVE	Fan motor	OKR	Terminal box on car roof
PE	Protective earth (wire)	RCD	Residual current device
REC	Operating panel for inspection travel — on car roof	SCCI	PCBA — car operation panel
SCMI2x	PCBA — interface to car controller	SCOP	PCBA — car operating panel

 Copyright © 2015 INVENTIO AG

SDIC	PCBA — interface to car controller	SEM	PCBA — evacuation module
SIBS	Fuse or circuit breaker for hoistway light	SIL	Fuse or circuit breaker for lighting mains
SIS	Fuse or circuit breaker for control circuit	SMIC	PCBA — main interface of elevator controller
SMICFC	PCBA — main interface of elevator controller	STM	Suspension and traction media
THMH	Thermal switch / sensor on hoisting motor	UET	Bridging of door contact (within door zone)
VF	Inverter (frequency converter)	ZQF	Trip counter